PTFE Lip Seal Design Guide

Catalog EPS 5340/USA

PTFE LIP SEALS

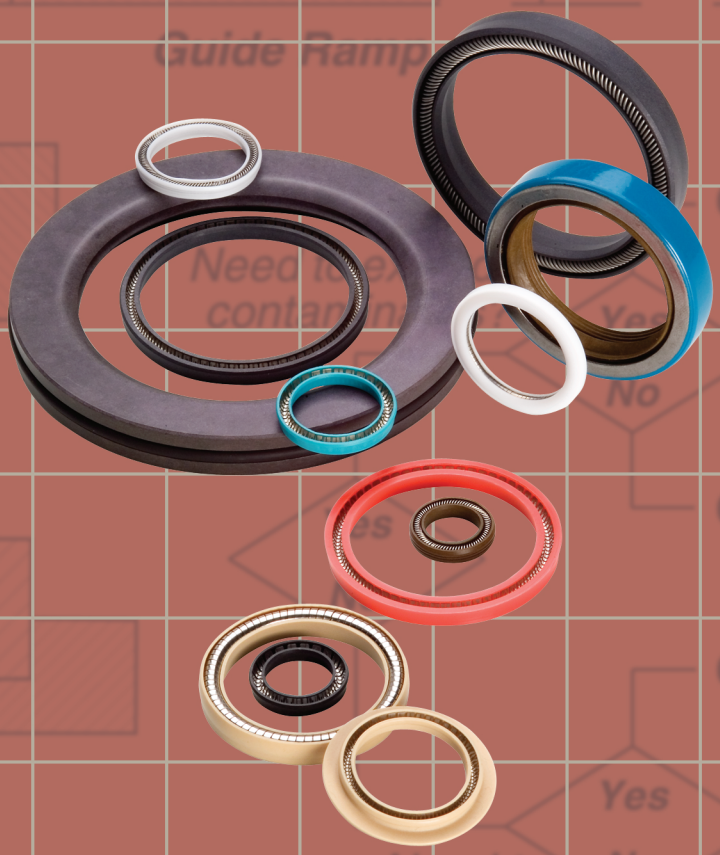

WARNING:

These products can expose you to chemicals including carbon black (airborne and extracts), antimony trioxide, titanium dioxide, silica (crystalline), di(2-ethylhexyl)phthalate, ethylene thiourea, acrylonitrile, 1,3-butadiene, epichlorohydrin, toluenediisocyanate, tetrafluoroethylene, ethylbenzene, formaldehyde, furfuryl alcohol, glass fibers, methyl isobutyl ketone, nickel (metallic and compounds), lead and lead compounds which are know to the State of California to cause cancer; and 1,3-butadiene, epichlorohydrin, di(2-ethylhexyl)phthalate, di-isodecyl phthalate, ethylene thiourea, methyl isobutyl ketone, methanol, toluene, lead and lead compounds which are known to the State of California to cause birth defects and other reproductive harm. For more information go to www.P65Warnings.ca.gov.

Engineered Polymer Systems Division
phone **801 972 3000**
fax **801 973 4019**
eps-ccare@parker.com
www.parker.com/eps

Care is taken in the preparation of this publication; however Parker shall not be responsible for a user's reliance on any inadvertent typographical errors or omissions. Information in this catalog is only accurate as of the date of publication. For more current information, please consult the Parker EPS Division website at **www.parker.com/eps.**

WARNING:

Failure, improper selection or improper use of the products and/or systems described herein or related items can cause death, personal injury or property damage.

For safe and trouble-free use of these products, it is important that you read and follow the Parker Seal Group Product Safety Guide. This Safety Guide can be referenced and downloaded free of charge at www.parker.com/eps and can be ordered, without charge, as Parker Publication No. PSG 5004 by calling 1-800-C-PARKER.

This document, along with other information from Parker Hannifin Corporation, its subsidiaries and authorized distributors, provides product and/or system options for further investigation by users having technical expertise. It is important that you analyze all aspects of your application and review the information concerning the product or system in the current product catalog. Due to the variety of operating conditions and applications for these products or systems, the user, through his or her own analysis and testing, is solely responsible for making the final selection of the products and systems and assuring that all performance, safety and warning requirements of the application are met.

The products described herein, including without limitation, product features, specifications, designs, availability and pricing, are subject to change by Parker Hannifin Corporation and its subsidiaries at any time without notice.

OFFER OF SALE

The items described in this document are hereby offered for sale by Parker Hannifin Corporation, its subsidiaries and its authorized distributors. This offer and its acceptance are governed by the provisions stated on the separate page of this document entitled "Offer of Sale" a copy of which may be downloaded at: http://www.parker.com/saleterms

©2008, 2014, 2016 , 2018 Parker Hannifin Corporation

PTFE Lip Seal Design Guide Table of Contents

Introduction 1

Engineering 2

Materials 3

Product Offering 4

FlexiSeal® Rod & Piston Seals 5

FlexiSeal® Face Seals 6

FlexiSeal® Rotary Seals 7

FlexiLip™ Rotary Seals 8

FlexiCase™ Rotary Seals (DISCONTINUED) 9

Parker Hannifin Corporation
EPS Division
Tel: (801) 972-3000
Fax: (801) 973-4019

www.parker.com/eps

PTFE Lip Seal Design Guide Appendix

A Design Action Request Form

B Problem Solved — Case Studies

C Chemical Compatibility

D ISO Tolerances

E Other Parker Products

Parker Hannifin Corporation
EPS Division

www.parker.com/eps

Introduction

The PTFE Lip Seal Design Guide is your premier PTFE seal selection guide for hardware design, seal configuration and material specification options for a wide range of standard and complex applications.

Parker Hannifin is a recognized industry leader focused on achieving innovative sealing solutions for the most demanding engineering applications. Parker's broad range of PTFE Lip Seals include:

FlexiSeal®, FlexiLip™, FlexiCase™

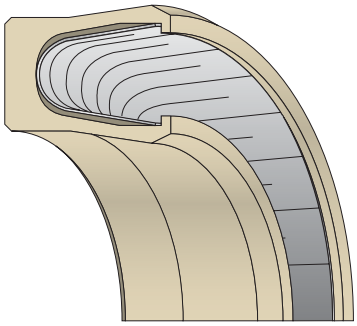

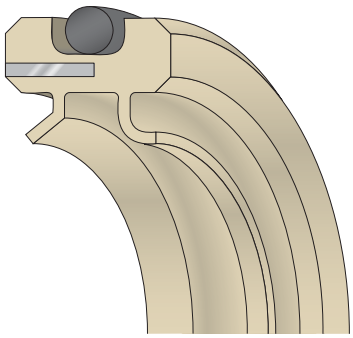

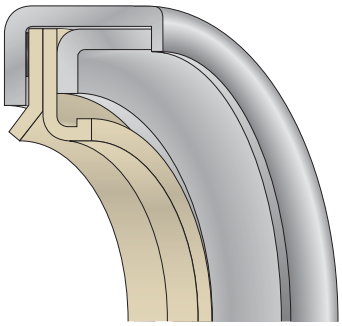

FlexiSeal

The FlexiSeal is a spring-energized U-cup utilizing a variety of jacket profiles, spring types and materials in Rod & Piston, Face and Rotary seal configurations. FlexiSeals are used where elastomeric seals fail to meet the temperature range, chemical resistance or friction requirements. Jacket profiles are made from PTFE and other high performance polymers. Spring types are available in corrosion-resistant metal alloys, including stainless steel, Elgiloy®* and Hastelloy®** (C-276 alloy).

FlexiLip

FlexiLip seals are rotary seals incorporating a deflected lip seal geometry. Anti-rotational devices such as flanges and O-rings are often utilized to prevent the seal from rotating with the shaft. Standard and custom sizes are available with a wide selection of PTFE materials. FlexiLip seals are suitable for sealing corrosive and abrasive media. A wide range of geometries and materials are available, depending on specific application requirements.

FlexiCase

The FlexiCase seal is a metal-cased rotary lip seal suitable for applications where elastomeric lip seals fail and mechanical seals are too costly. The filled PTFE element provides greater chemical compatibility, wider temperature ranges, higher pressure capabilities, and longer life than elastomeric lip seals.

* Elgiloy® is a registered mark of Elgiloy Specialty Metals, Elgin, IL.
** Hastelloy® is a registered mark of Haynes International Inc., Kokomo, IN.

01/15/06

Parker Hannifin Corporation
EPS Division
Tel: (801) 972-3000
Fax: (801) 973-4019
www.parker.com/eps

FlexiSeal Profiles

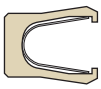 FBC-V	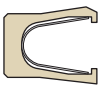 FBS-V	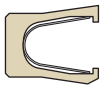 FBG-V	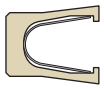 FBD-V	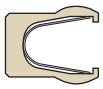 FBK-V	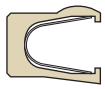 FBM-V
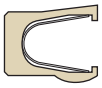 FBL-V	FBN-H	FBS-H	FBG-H	FBN-C	FBS-C
FBG-C	FEC-V	FED-V	FEK-V	FEN-C	FEN-H
FIN-H	FIC-V	FID-V	FIK-V	FIN-C	FCC-C
FCC-V	FCS-V	FCS-C	FHC-V	FHS-V	FHC-C
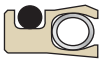 FHS-C	FFC-V	FFS-V	FFC-C	FFS-C	FFN-H

FlexiLip Profiles

LFN-N	LEN-N	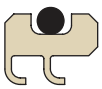 LDN-N	LMN-N	LFE-N	LEE-N	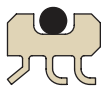 LDE-N	LGN-N
LFN-S	LEN-S	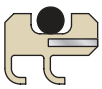 LDN-S	LMN-S	LFE-S	LEE-S	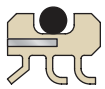 LDE-S	LGN-S

FlexiCase Profiles

CFN	CMN	CEN	CDN	CGN	CJN	CHN
CFE	CME	CEE	CDE	CGE	CJE	CHE

For additional information on all profiles, see **Tab 4.**

01/15/06

Parker Hannifin Corporation
EPS Division
Tel: (801) 972-3000
Fax: (801) 973-4019
www.parker.com/eps

Engineering Excellence

Parker Hannifin Corporation's Engineered Polymer Systems (EPS) Division has a dedicated PTFE engineering team strategically focused on achieving innovative sealing solutions for the most demanding engineering applications. Our design/application engineers use state-of the-art CAD (2D/3D modeling) systems to custom fit innovative sealing designs to meet and exceed the unique standards set forth by our customers.

Parker's engineering staff is consistently dedicated and willing to explore new ideas with the companies and individuals we serve. Different companies come to Parker for different reasons, but our engineering role is always the same… working to help those companies, with Parker's engineering expertise, to make anything possible.

Quality Commitment

Parker is committed to consistently delivering excellence in quality and service through our continuous improvement of our people, products and systems. Our FlexiSeal manufacturing facilities are certified to AS9100 and ISO/9000 standards.

Our commitment to quality and service is supported by our investment in technologically advanced test and inspection methods. We're constantly striving to improve customer satisfaction and product quality through the implementation of:

- Six Sigma methodology
- Lean manufacturing
- TQM methodology
- Advanced product quality planning (APQP)
- Feasibility studies
- Kaizen events

Electronic Ordering

To manage your supply chain efficiently, you need up-to-the-minute information on stock levels and an ordering system that minimizes paperwork.

Parker offers state-of-the-art ordering systems like ParZap™ and PHconnect, designed to improve efficiency. Our ParZap System combines powerful inventory management software with a convenient hand-held scanner, allowing you to place orders directly to your local distributor or Parker Service Center. And our Internet-based EDI capabilities allow you to track your orders in real-time from anywhere in the world.

Applications

PTFE FlexiSeal, FlexiLip and FlexiCase seals are utilized in a variety of industries. In fact, this PTFE Lip Seal Design Guide exists separately from other Parker EPS market-specific publications precisely because virtually every industry has specific needs for the unique physical and chemical properties of these remarkable seals.

PTFE's high temperature rating and tolerance of a wide range of chemicals make it suitable in Aerospace Jet Engines as a static or dynamic seal.

Aircraft Engines
Require High Temperature Ratings

01/15/06

Parker Hannifin Corporation
EPS Division
Tel: (801) 972-3000
Fax: (801) 973-4019

FlexiLip and FlexiCase seals are often used on motors and compressors and other components with high speed rotary shafts due to their ability to resist wear even while pressurized.

Motors
Require Wear Resistance

FlexiSeal profiles are often used when predictably low friction is critical and especially when parts must have low breakaway friction after long periods of static service.

Control Valves
Require Low Friction

Parker Hannifin Corporation
EPS Division
Tel: (801) 972-3000
Fax: (801) 973-4019

Engineering Topics

- Testing and Validation, see **Page 2-2**
- Hardware Configurations/Installation, see **Page 2-3**
- Surface Finish and Hardness, see **Page 2-9**
- Extrusion Gaps and High Pressure, see **Page 2-10**
- Spring Choices, see **Page 2-12**
- Lip Shapes, see **Page 2-16**
- Rotary Seal Considerations, see **Page 2-17**

FAQs

Q: How does the FlexiSeal® work?

A: The FlexiSeal lips and spring energizer are compressed when installed into the seal gland. The resilient spring responds with constant force, pushing out the sealing lips, creating a gas tight seal against the sealing surfaces. As pressure is introduced in the system the seal expands — increasing the sealing force beyond that provided by the spring and jacket material.

In dynamic applications, the spring expands, compensating for seal wear while continuing to provide load. In conditions that see thermal cycling, the spring system continues to energize the seal lips without taking a compression set or becoming too soft or hard, as an elastomer can.

The flexible spring allows for a wide tolerance range that can help overcome hardware misalignment and eccentricity, without causing excess friction or the inability to seal. Three different FlexiSeal spring designs are available that provide individual attributes for each application. See **Page 2-12** for more information on spring types.

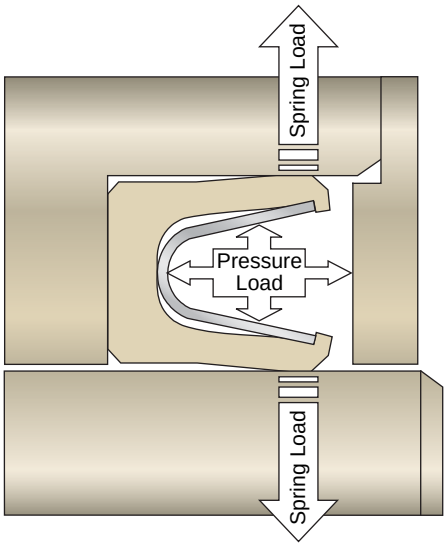

FlexiSeal Design Function

Q: How do I choose the right profile for my application?

A: Parker's PTFE product line includes both standard designs for the most common applications and custom designs that our engineers can help you develop.

For the long term, we suggest that you familiarize yourself with the design elements in this Engineering section that are critical when choosing a FlexiSeal, FlexiLip™ or FlexiCase™ seal.

For quick reference and ease of sorting through the many standard designs, we have provided simple decision trees and placed them throughout this design guide. The master decision tree is located on **Page 4-2** and will help you select which product family best suits your application and will send you off to the right section and subsequent decision tree to help you find the answers you need.

If it becomes apparent that you need a custom design to meet your unique needs, or if you just want us to confirm the standard seal choice you've made, please contact Parker's PTFE Engineering team at 801-972-3000.

As with all design engineering, tabulations contained herein are provided for use as a guide only. Validation and testing under actual operating conditions is recommended.

02/15/08

Parker Hannifin Corporation
EPS Division
Tel: (801) 972-3000
Fax: (801) 973-4019

www.parker.com/eps

2

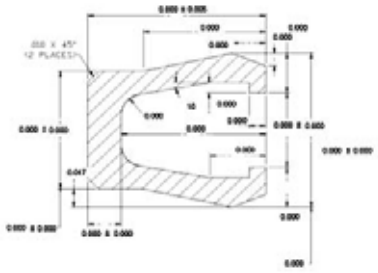

Design

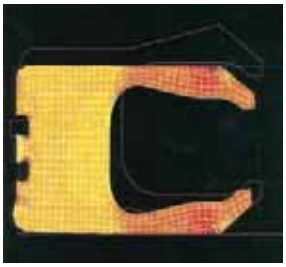

Analysis

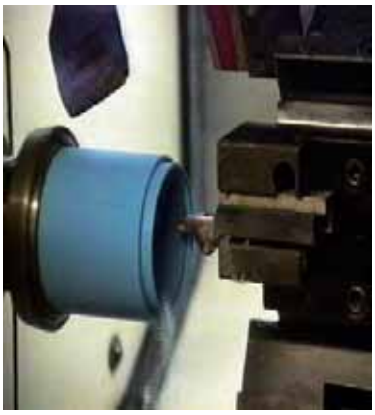

Manufacturing

Final Product

Testing and Validation

EPS Division uses Non-linear Finite Element Analysis (FEA) for design optimization during its product design development cycle. Utilizing FEA streamlines the prototyping phase of seal development by improving performance predictability, which cost-effectively accelerates speed to market.

Parker's core-competencies using FEA simulation include:

- Determining friction effects and sealability.
- Analyzing the contact pressure profile to better understand seal contact behavior under pressure and temperature.
- Analyzing material extrusion, friction build-up and slipping effects on the seal surface at higher temperatures and pressures.
- Accurate prediction of seal failure modes by analyzing fatigue and plastic strain relaxation.
- Developing force vs. deflection plots for axial and radial sealing capabilities.
- Understanding the principal strain regions associated with the design.

FEA results are often validated using real-time mechanical product testing.

EPS Division has a sophisticated mechanical testing lab with several breakthrough advanced technologies. Product validation testing is carried out in accordance with ASTM specifications, Society of Automotive Engineers, military standards and aerospace standards. In addition our material development lab is equipped to carry out testing for material characterization such as Fourier Transform Infrared (FTIR) spectrophotometer, thermal conductivity, Tribometer-PTFE wear testing, differential scanning calorimeter (DSC), deformation under load, etc.

For PTFE seal design assistance contact Parker's PTFE Engineering team at 801-972-3000.

01/15/06

Parker Hannifin Corporation
EPS Division
Tel: (801) 972-3000
Fax: (801) 973-4019

2

Gland Designs and Installation

Two-Piece Glands

Parker FlexiSeals are rigid in comparison to elastomer seals such as O-rings and U-cups. They can be damaged if stretched or compressed beyond their material limitations. It is recommended that a two-piece, split gland design be utilized whenever possible. This allows easy installation or removal of the FlexiSeal without the need for additional tools, and will greatly reduce the risk of damage to the seal.

Lead-in chamfers that are blended and very smooth are necessary to prevent damage to the seal during installation. Full surface finish recommendations are described on **Page 2-9**.

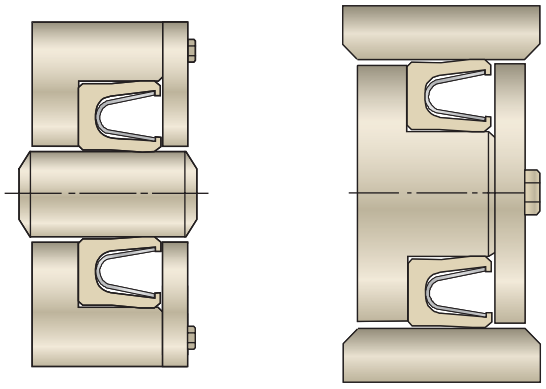

Two-Piece Rod and Piston Glands

Two-Piece Gland Installation

Heel First Seal Installation

When installing the FlexiSeal with the heel or non-pressure side first, the lead-in chamfers may be smaller than when the seal must go in lips first. The FlexiSeal is designed with a slight clearance at the heel, and is also chamfered. If lead-in chamfer angles cannot be made, a full polished radius may also be used. Both designs must be very smooth and free from sharp edges that can damage the seal.

Note: Sometimes a combination of heel first and lip first installation is required. When this occurs, match the appropriate table with the demands made on the chamfer.

Table 2-1. Heel First Recommended Lead-In Chamfer

Cross-Section Size		C Min.
Nominal	Cross Section	
1/16	062	0.020
3/32	093	0.030
1/8	125	0.030
3/16	187	0.040
1/4	250	0.050

Note: Complete gland dimensions are provided in **Tabs 5 – 9**.

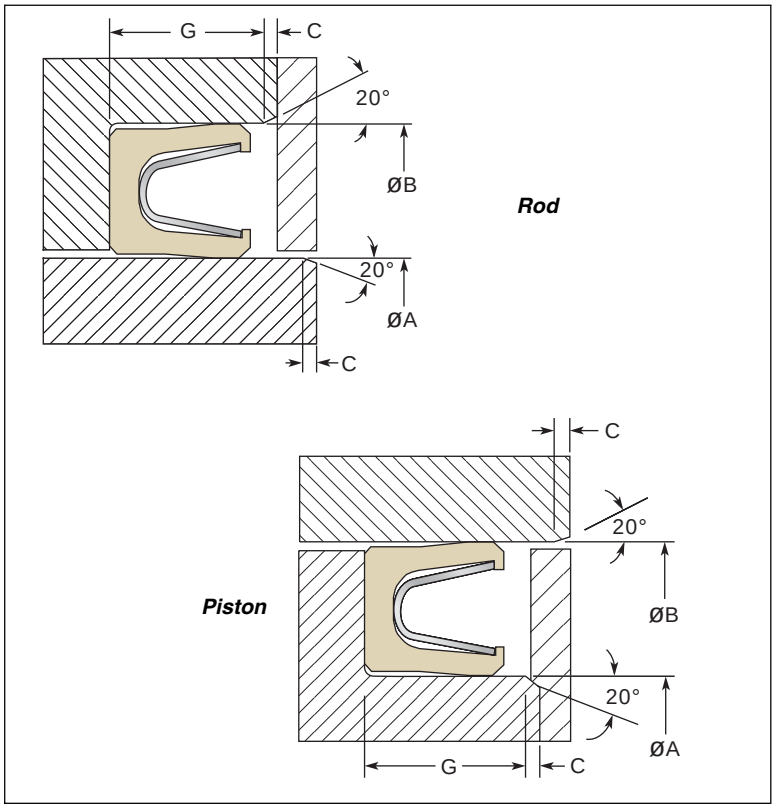

Figure 2-1. Two-Piece Gland Heel First Installation

02/15/08

Parker Hannifin Corporation
EPS Division
Tel: (801) 972-3000
Fax: (801) 973-4019
www.parker.com/eps

2

Lips First Seal Installation

When installing the FlexiSeal with the lips or pressure-side first, the lead-in chamfers need to be longer than when the seal goes in heel first. The FlexiSeal is designed with pre-load interference on the lips that require additional clearance to prevent damage during installation. A stepped retention plate is required to provide a flat backed surface for the seal and to prevent extrusion into the lead-in angles. All chamfers must be very smooth and free from sharp edges that can damage the seal. If the necessary angles and retention plate cannot be accomplished, installation tools will be required.

Table 2-2. Lips First Recommended Lead-In Chamfer

Cross-Section Size		C Min.
Nominal	Cross Section	
1/16	062	0.050
3/32	093	0.070
1/8	125	0.090
3/16	187	0.110
1/4	250	0.140

Note: Complete gland dimensions are provided in **Tabs 5 – 9**.

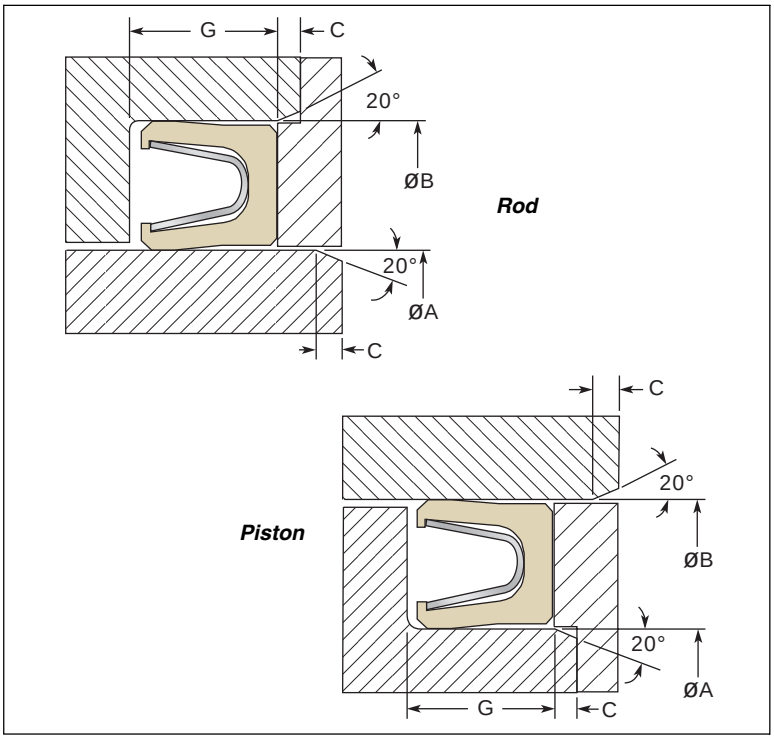

Figure 2-2. Two-Piece Gland Lips First Installation

Two-Piece Flanged Glands

The flanged design can be used in either static, rotary or reciprocating applications and is designed to be dynamic only on the ID. It excels in rotary applications because the flange can be clamped axially to prevent the seal from rotating with the shaft. This extra stability allows the flanged design to hold more pressure at higher surface speeds. The gland must be made in two pieces for installation purposes and could be lips-first or heel-first. Use **Table 2-1** or **Table 2-2** for the C^1 chamfer commensurate with the direction of shaft insertion. Complete flanged gland dimensions are provided starting on **Page 7-19**.

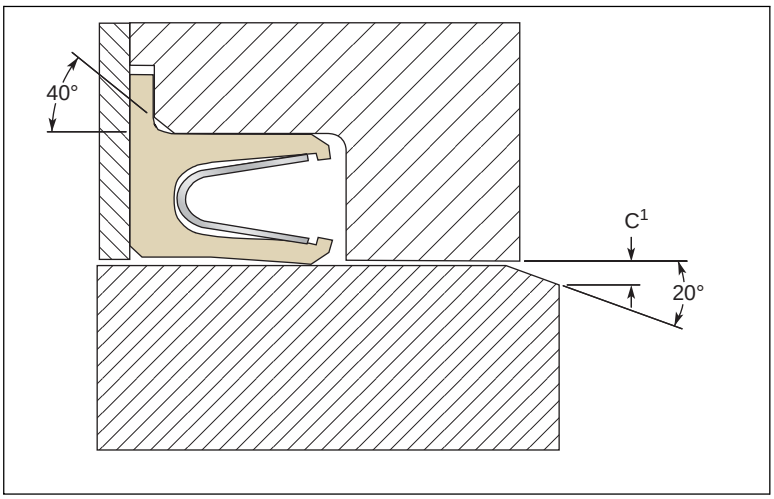

Figure 2-3. Two-Piece Flanged Gland

02/15/08

Parker Hannifin Corporation
EPS Division
Tel: (801) 972-3000
Fax: (801) 973-4019
www.parker.com/eps

Step Cut Glands

An alternative to the two-piece gland is the step cut design. This solid one-piece configuration has a reduced wall on the pressure side of the groove. This allows the seal to snap into the groove without the need for a separate retainer or installation tools.

The step is designed to hold the seal in the groove during final assembly and under dynamic conditions such as low pressure return strokes in reciprocating applications. In pressurized conditions, the FlexiSeal is naturally held into the back of the groove.

The step cut gland can be utilized for both rod and piston seals. We recommend using a FlexiSeal with a scraper lip on the static surface to provide a more positive snap-tight fit. See profile offerings in **Tab 4** for available options. Complete dimensions for this design are supplied in **Tab 5**.

Step Cut Gland Installation

The step cut gland can *only* be used when the seal sees pressure from the open or spring side of the seal. This requires the seal to be installed heel or non-pressure side first, snapping the seal lips behind the retention step. After installing the seal into the groove, the assembly can be pushed into a piston bore, or over a rod.

*Dimensions for lead-in chamfer C2 are supplied for both heel first or lips first final assembly into the bore or over the rod.

Note: Complete gland dimensions are provided in **Tabs 5 – 9**.

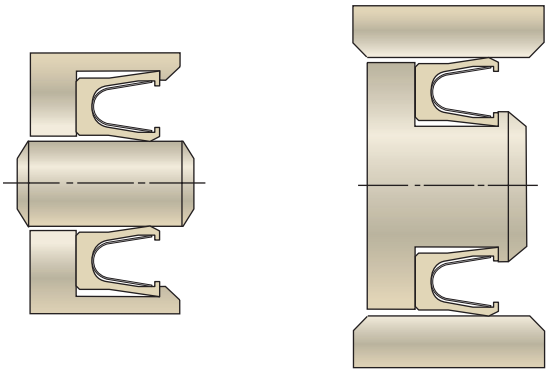

Step Cut Glands

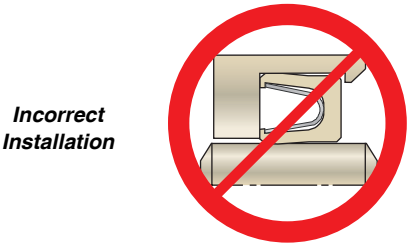

Incorrect Installation

Table 2-3. Nominal Cross-Sections

Cross-Section Size		C1 Min.	C2 Min.		D
Nominal	Cross Section		Heel First*	Lips First*	
1/16	062	0.035	0.020	0.050	0.007 / 0.010
3/32	093	0.050	0.030	0.070	0.010 / 0.015
1/8	125	0.065	0.030	0.090	0.015 / 0.020
3/16	187	0.080	0.040	0.110	0.020 / 0.025
1/4	250	0.095	0.050	0.140	0.025 / 0.030

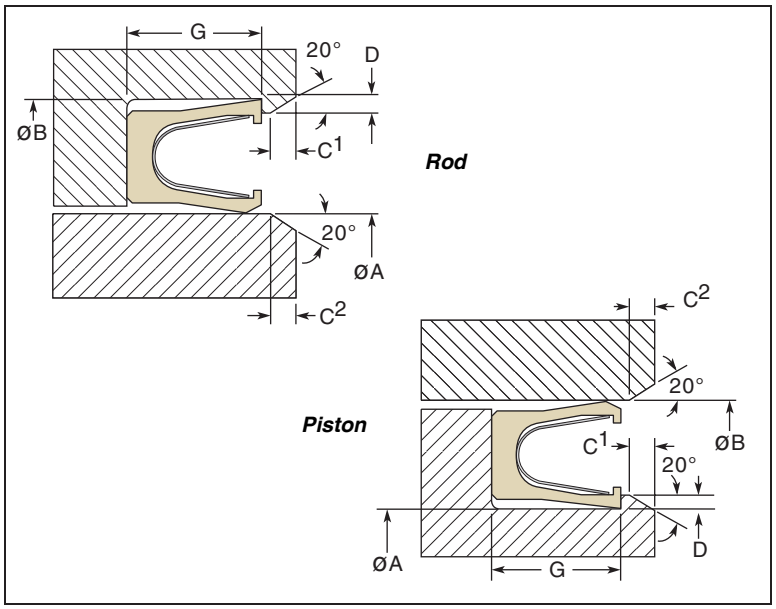

Figure 2-4. Step Cut Gland Installation

01/2016

Parker Hannifin Corporation
EPS Division
Tel: (801) 972-3000
Fax: (801) 973-4019
www.parker.com/eps

2

Alternative Glands

For heel first installation with a snap ring retainer, the snap ring groove is set into a reduced diameter to ensure that the seal does not pass over the edges. This design can be used for both rod and piston seals.

For lips first installation with a support ring and snap ring retainer, the snap-ring groove is at a reduced diameter to prevent damage to the seal. The support ring must meet clearance gap recommendations as outlined in this guide. Load ratings for snap rings must be considered to prevent fatigue or failure.

Caution: It is the responsibility of the designer to test any alternate gland designs and/or components used to ensure that they meet all required operating conditions of their specific application.

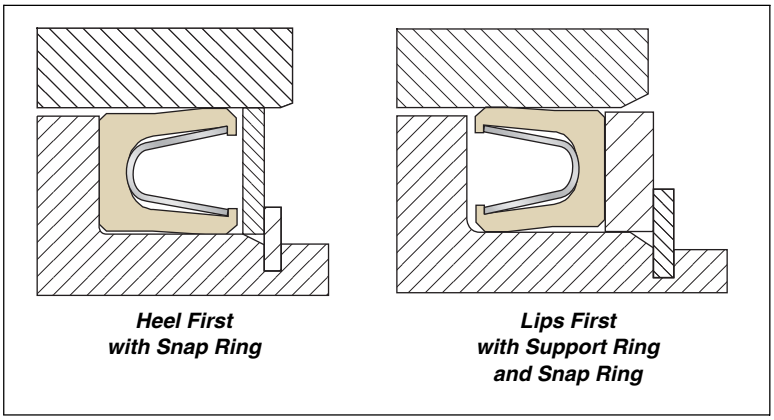

Figure 2-5. Alternative Installations

Closed Glands

The least desirable gland design for the FlexiSeal is the closed gland design. The seal cross-section, diameter and material are all factors that determine whether the FlexiSeal can be stretched into a solid piston groove or compressed into a rod seal housing. FlexiSeals are more easily stretched into piston grooves than compressed into rod seal housings.

Table 2-4 is a guide for rod seal minimum diameters that can be used in solid grooves utilizing installation and re-sizing tools. **Table 2-5** is for minimum piston seal diameters.

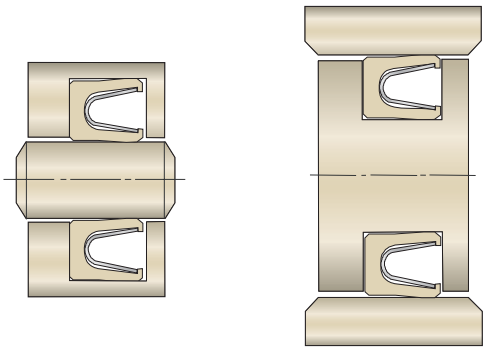

Closed Glands

Table 2-4. Rod Seals — Suitable for Solid Grooves

Cross-Section Size		Minimum Rod Diameter		
Nominal	Cross Section	V Series	C Series	H Series
1/16	062	1.500	1.000	1.000
3/32	093	2.750	2.500	2.500
1/8	125	5.000	4.500	4.500
3/16	187	11.750	9.000	9.000
1/4	250	20.000	16.000	16.000

Table 2-5. Piston Seals — Suitable for Solid Grooves

Cross-Section Size		Minimum Bore Diameter		
Nominal	Cross Section	V Series	C Series	H Series
1/16	062	1.500	1.000	1.000
3/32	093	2.000	1.250	1.250
1/8	125	2.750	2.000	2.000
3/16	187	4.750	3.000	3.000
1/4	250	6.000	4.500	4.500

02/15/08

Parker Hannifin Corporation
EPS Division
Tel: (801) 972-3000
Fax: (801) 973-4019

Closed Gland Installation

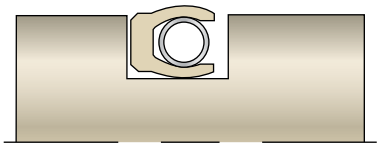

Closed Gland

Piston Seal Installation in Solid Gland

A stretching guide ramp and resizing tool should be fabricated to assist in installing the FlexiSeal into a fully closed cavity. Refer to these drawings for design specifications.

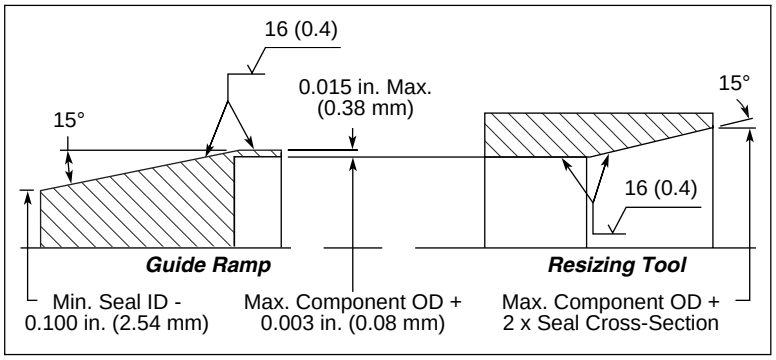

Figure 2-6. Stretching Guide Ramp and Resizing Tool

STEP 1: Place the seal on the guide ramp. Preheating the seal to as much as 300 °F (150 °C) in either oil, air or water will soften the seal and aid in stretching and installing the seal. Care must be taken to prevent burns when using this option.

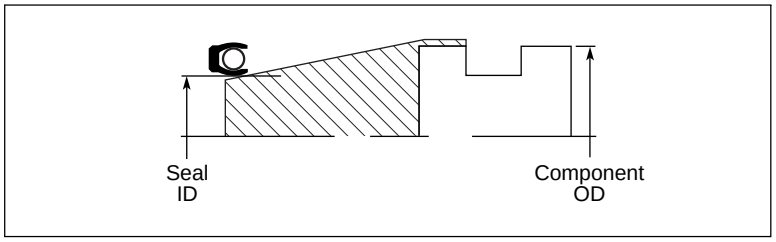

Figure 2-7. Place on Guide Ramp

STEP 2: Push the seal over the guide ramp and into the groove.

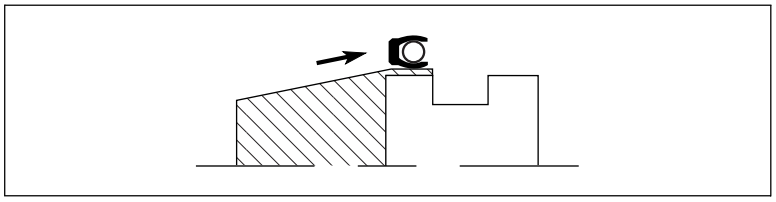

Figure 2-8. Push Seal

STEP 3: Slide the resizing tool over the seal to compress the seal to its original diameter.

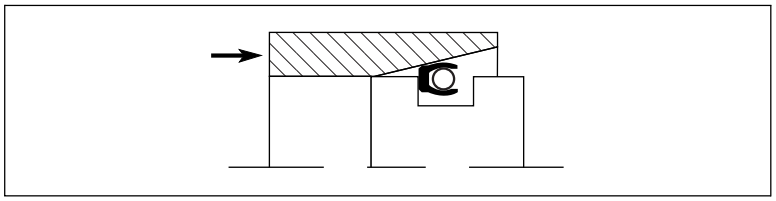

Figure 2-9. Compress Seal

02/15/08

Parker Hannifin Corporation
EPS Division
Tel: (801) 972-3000
Fax: (801) 973-4019
www.parker.com/eps

2

Rod Seal Installation in Solid Gland

STEP 1: Install the seal with the blunt end of the pusher tool.

STEP 2: Resize the seal with the rounded end of the tool.

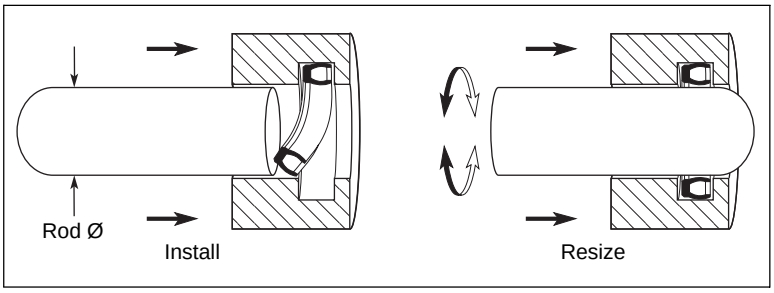

Figure 2-10. Rod Seal Installation in Solid Gland

One-Piece Face Seal Glands

Face seal glands can be one-piece machined grooves because seal installation does not require excessive stretching or compressing. The FlexiSeal is designed to have a clearance or slight interference fit on the heel of the seal (non-pressure side) so it will press easily into the groove. More information is available in **Tab 6**.

Glands with Special Requirements

The metal case in a FlexiCase seal is designed to secure a firm press-fit into a counterbore. This fit can always be reinforced by a secondary retainer or snap ring for higher pressure applications. Since the FlexiLip does not have a metal can for bore retention, it is more succeptable to axial movement due to pressure forces. For this reason, Parker recommends using a retainer as shown in applications where pressure could push the seal out of the gland. The FlexiLip's metal band option allows it to retain its diameter during temperature cycles, but does not act to press-fit the seal into place like a FlexiCase.

More gland design information can be found in the Engineering sections of **Tabs 8** and **9**.

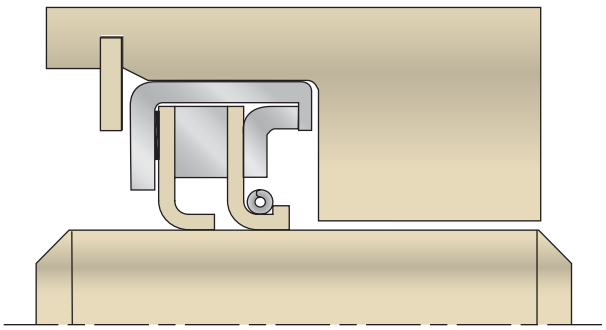

FlexiCase in Gland

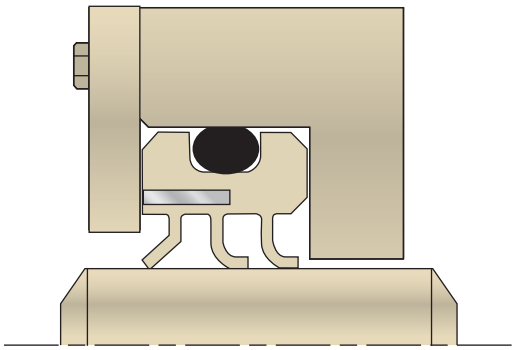

FlexiLip in Gland

Parker Hannifin Corporation
EPS Division
Tel: (801) 972-3000
Fax: (801) 973-4019

Surface Finish and Hardness

Mating Surface Finish

Proper surface finish of the seal gland is critical to ensure positive sealing, and achieve the longest seal life possible in dynamic applications. Mating surfaces that are too rough can create leak paths and can be very abrasive to the seal. Unlike elastomer contact seals, PTFE-based FlexiSeals can run on very smooth surfaces with or without lubrication. Due to the toughness and low coefficient of friction of PTFE, FlexiSeals slip over the high points of the mating surface and resist abrasion. To maximize seal performance, the recommendations for surface roughness in **Table 2-6** should be followed.

Dynamic surfaces with relatively rough finishes will result in higher wear rates which decrease the seal life and may compromise performance.

For additional information on understanding and applying the benefits of appropriate hardware surface finish specifications please consult the Engineering Section (pages 2-9 through 2-13) of Parker's Fluid Power Seal Design Guide (Catalog EPS 5370).

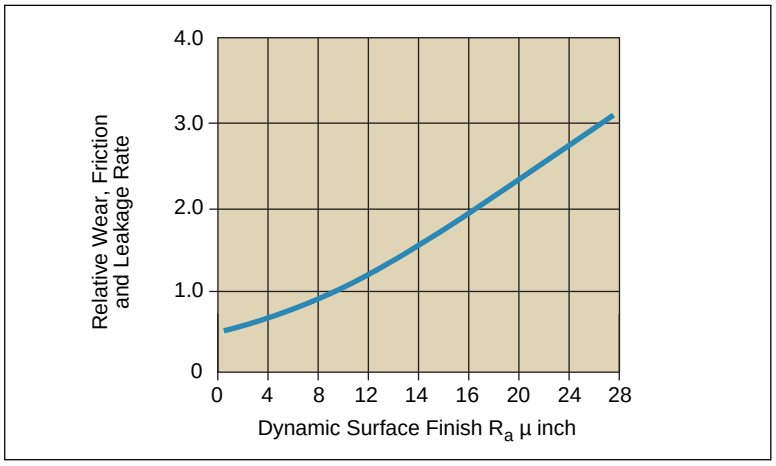

Figure 2-11. Dynamic Surface Finish vs. Wear

Table 2-6. Surface Roughness, R_a

Media Being Sealed	Dynamic Surfaces		Static Surfaces	
	µ inch	µ m	µ inch	µ m
Cryogenics	4 max.	0.1 max.	8 max.	0.2 max.
Helium Gas Hydrogen Gas Freon	6 max.	0.15 max.	12 max.	0.3 max.
Air Nitrogen Gas Argon Natural Gas Fuel (Aircraft and Automotive)	8 max.	0.2 max.	16 max.	0.4 max.
Water Hydraulic Oil Crude Oil Sealants	12 max.	0.3 max.	32 max.	0.8 max.

Mating Surface Hardness

Most dynamic applications require a hard running surface on the dynamic portion of the hardware. The harder surface allows the use of higher reinforced seal materials that will increase both the seal and hardware life. Softer running surfaces must use lower wear resistant seal materials that will not damage the hardware, but normally yield shorter seal life. A balance between seal material and dynamic surface hardness must be met to ensure that the seal remains the sacrificial component.

Rev.4/2/2020

02/15/08

Parker Hannifin Corporation
EPS Division
Tel: (801) 972-3000
Fax: (801) 973-4019

2

When the dynamic surface hardness is below 45 Rc, most seal materials will polish the running surface of the hardware and the seal. This initial break-in period will cause seal wear to taper off over a period of time depending on the seal material, surface finish, pressure and velocity of the application. When hardness exceeds 45 Rc, the initial surface finish is very important since the surface is much harder to polish and the time to achieve break-in is longer. Surface hardness above 65 Rc will resist polishing and therefore the initial surface finish is more critical to seal life.

The hardness of the dynamic hardware surface affects the wear rate of the seal. Additionally, some seal jacket materials are abrasive and will wear softer metal shafts or dynamic components. In general, higher surface hardness results in better overall seal and hardware performance. The ideal hardness of the dynamic surfaces of the hardware is 50 to 60 Rockwell C.

High Pressure Seals — Battling Extrusion Gaps

Pressure capabilities are a function of temperature, seal material, extrusion gaps and seal design.The standard FlexiSeal is rated to 3000 psi when used in glands conforming to the dimensions supplied in this guide, using materials that meet the temperature requirements of the application. Extended heel radial FlexiSeals are available which increase the pressure rating to 10,000 psi under the same conditions.

The extended heel FlexiSeal design prevents seal extrusion by increasing the material in the heel of the seal, effectively increasing its overall length. This extra material acts as a built-in back-up ring and fills the gap before damage is done to the rest of the seal. In applications that have excessive clearance gaps and/or pressures above 10,000 psi, it may be necessary to use separate back-up device(s) or special seal designs to reduce the seal's exposure to the gap. See **Page 5-10** for information on how to designate an extended heel in the part number. Also, refer to **Figure 2-13** for a detailed look at how pressure rating is affected by several parameters.

The pressure ratings for FlexiLip and FlexiCase seals are profile specific. In other words, each profile has been given a specific pressure rating according to its own physical limitations as shown on **Pages 8-9** and **9-8**.

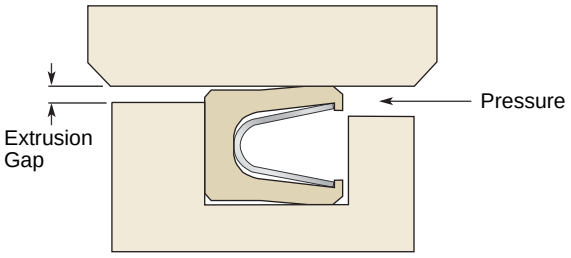

Extrusion Gap

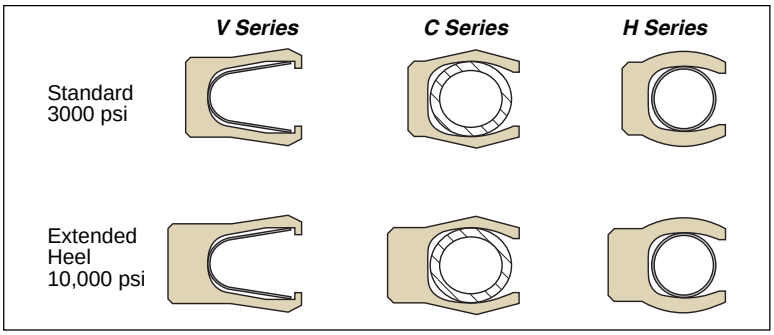

Figure 2-12. High Pressure Seals

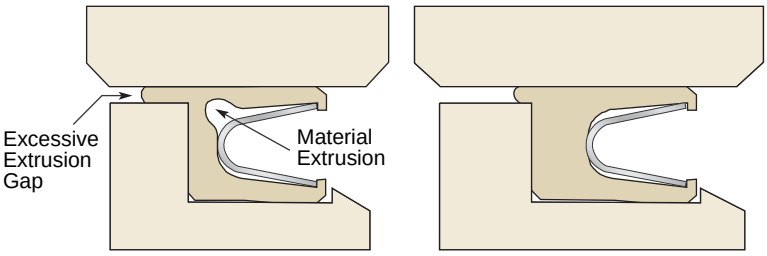

Standard FlexiSeal ***Extended Heel FlexiSeal***

01/15/06

Parker Hannifin Corporation
EPS Division
Tel: (801) 972-3000
Fax: (801) 973-4019

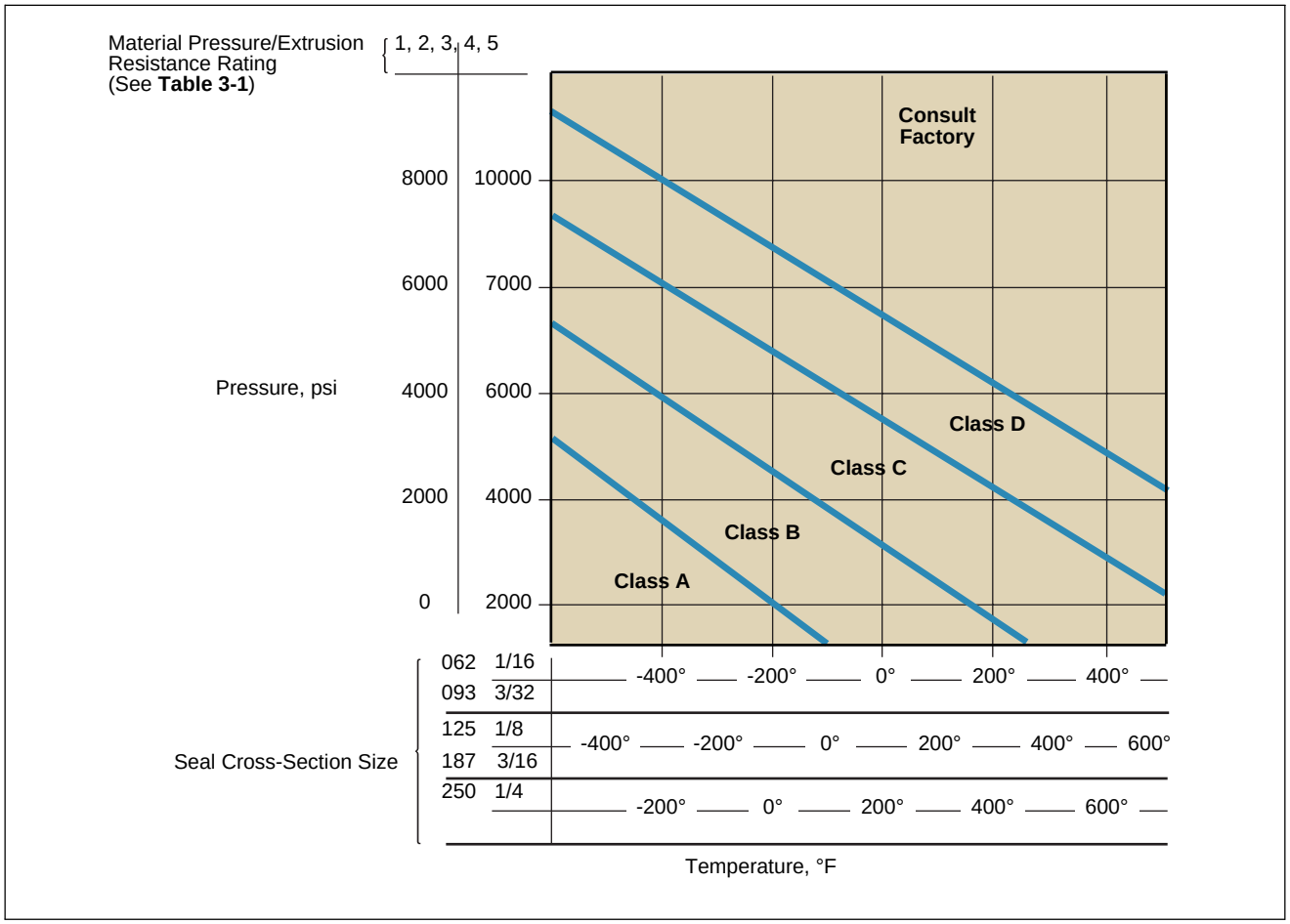

Figure 2-13. Extrusion Gap Class

Table 2-7. Maximum Radial Extrusion Gap*

Heel Type	Cross-Section	Class A	Class B	Class C	Class D
Standard		0.008"	0.006"	0.004"	0.002"
Extended		0.012"	0.009"	0.006"	0.002"

*Values are provided as a guide only. Validation in actual service conditions is recommended.

02/15/08

Parker Hannifin Corporation
EPS Division
Tel: (801) 972-3000
Fax: (801) 973-4019

2

V Series — Cantilever

C Series — Canted-Coil

H Series — Helical

Spring Designs

The FlexiSeal uses one of three different spring types to energize the jacket. The two elements to consider when selecting a spring design are its load value and its deflection range. The spring's load affects the sealing ability, friction and wear rate. As the spring load is increased, the lips seal tighter, with friction and wear increasing proportionately. The spring's deflection range affects the seal's ability to compensate for variations in gland tolerances and for normal seal wear. Each spring size has a specific deflection range. The available deflection increases as the seal and spring cross-section increases; this could be a deciding factor in selecting one cross-section over another. Springs with a wide deflection range should be used when sealing surfaces are not concentric (see **Page 2-19**).

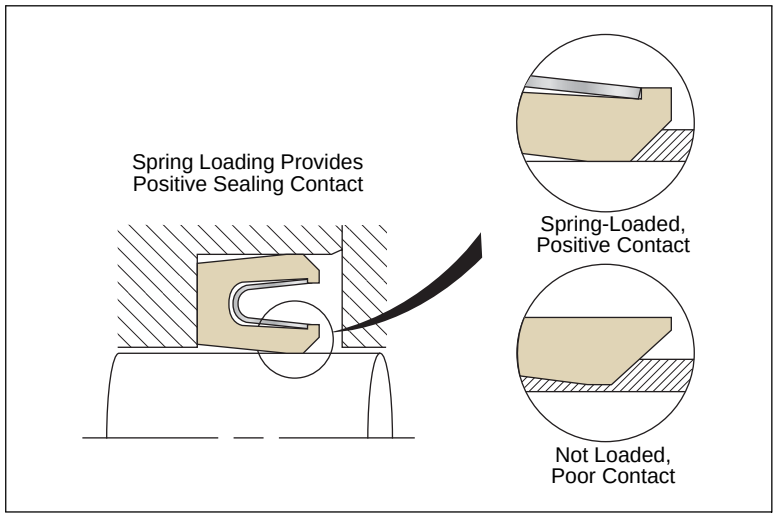

Figure 2-14. Spring Loading

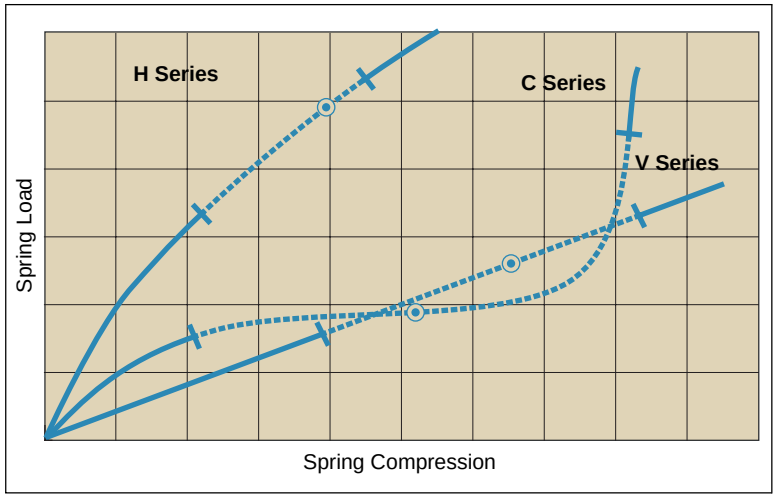

Figure 2-15. FlexiSeal Spring Energizers

Figure 2-15 shows a relative comparison of load vs. deflection curves for the three spring types. The ⊙ signifies the typical deflection when the seal is installed. The hatch marks indicate the deflection range through which the seal will function properly. Notice that H Series has a much smaller deflection range than both the V and the C Series.

01/15/06

www.parker.com/eps

Parker Hannifin Corporation
EPS Division
Tel: (801) 972-3000
Fax: (801) 973-4019

Cantilever Springs — V Series

The FlexiSeal Cantilever spring is made from flat metal strip stock of 300 Series stainless steel or Elgiloy® as an option. The strip stock is punched or chemically etched into a serpentine pattern and formed into a rounded "V" shape. It is available in either a light or medium load spring. The medium spring is suitable in most applications, but the light load spring can be used if having low friction is more important than sealability. The medium spring load deflection curve is depicted in **Figure 2-15** on **Page 2-12**.

The cantilever spring is intended for dynamic applications involving rotary or reciprocating motion. It can also be used in static conditions when there is need for a higher deflection spring due to wide gland tolerance, excessive expansion and contraction, or lift-off due to high pressure.

The long beam leg design puts the spring load out at the leading edge of the seal, creating the best load location for the FlexiSeal to act as a scraper when the optional scraper lip is selected.

The geometry of the V Series cantilever spring provides flexibility by utilizing individual tabs, separated by small gaps. This shape allows the spring to flex into radial and axial seal designs. The spring tabs can overlap on the ID and spread apart on the OD when the cross-section is too large for the diameter.

Table 2-8 provides the minimum diameters for V Series springs for rod and piston seals, as well as internal and external pressure face seals. For diameters smaller than those listed, C or H Series spring designs are recommended.

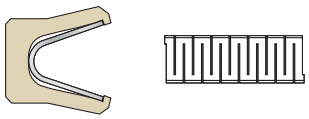

V Series / Cantilever

Table 2-8. Minimum Diameters for V Series

Nominal Cross-Section	Rod Shaft Dia.	Piston Bore Dia.	Internal Pressure (Seal OD)	External Pressure (Seal ID)
1/16	0.125	0.250	0.750	0.500
3/32	0.187	0.375	1.250	0.875
1/8	0.375	0.625	1.750	1.125
3/16	0.875	1.250	2.250	2.000
1/4	1.625	2.125	3.500	3.000

Features

- V-shaped spring with moderate load vs. deflection
- Standard inch/fractional and MIL-G-5514 sizes
- Standard 300 series stainless steel springs
- NACE compliant Elgiloy springs available in medium spring load, -450 to 600 °F
- Scraper lip designs for abrasive medias
- Available as external & internal pressure face seals

Recommended Applications

- Reciprocating rods & pistons
- Rotary shafts <100 sfpm
- Wide tolerance and misaligned glands (static)
- Abrasive medias (when scraper lip is designated)
- Dynamic applications above 450 °F

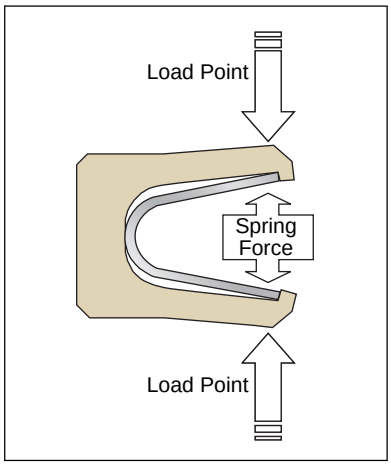

Figure 2-16. Installed State

02/15/08

Parker Hannifin Corporation
EPS Division
Tel: (801) 972-3000
Fax: (801) 973-4019

2

Canted-Coil Springs — C Series

The FlexiSeal C Series spring is made from round wire that is coiled and formed into a canted or slanted shape. The result is a radial compression spring with a very flat load versus deflection curve as illustrated in **Figure 2-15** on **Page 2-12**. Both 302 stainless steel and C-276 alloy are available as standards in three different spring loads.

The canted-coil spring is intended for dynamic reciprocating and rotary applications. It is also used in static applications when wide gland tolerance or misalignment is present. The flat load curve of this design makes it an ideal choice for friction sensitive applications.

The C Series spring can be fit into small seal diameters without overlapping the individual spring coils. Because the ID coils tend to butt up to each other, the spring has very small gaps providing maximum spring contact. This geometry is well suited for dynamic rod seal applications less than 1/2" diameter.

The C Series spring is available in Light, Medium and Heavy load ranges.

- **Light:** Applications that require extremely low break-out and running friction when sealing ability is less important than friction.
- **Medium:** General application. Medium friction but reliable sealing capability. Normally the starting point for new applications. Balance functions of friction, sealing ability and dynamic wear.
- **Heavy:** Applications where optimum resilience is required due to hardware separation. Accelerated seal material wear in dynamic applications. Used when primary objective is sealing and friction and/or wear is secondary.

C Series / Canted-Coil

The C Series spring produces compression load near the center of the seal. The standard beveled lip seal geometry puts the point of contact slightly in front, forcing the spring back into the spring cavity. The lip design provides concentrated unit load at the sealing interface, and allows lubrication to the dynamic lip, increasing the wear life. Because of this geometry, the C Series is not the best choice for abrasive medias. For abrasive conditions the FlexiSeal V Series is recommended. See **Page 2-13** for details.

Features

- Canted coil spring with flat load vs. deflections
- Light, medium and heavy load springs standard
- Standard inch/fractional and MIL-G-5514 sizes
- Standard 302 series stainless steel springs
- C-276 alloy springs available
- Available as external & internal pressure face seals

Recommended Applications

- Friction sensitive applications
- Reciprocating rods & pistons
- Rotary shafts <1000 sfpm
- Wide tolerance and misaligned glands
- Dynamic applications above 450 °F
- Diameters <1/2" and cross-sections <3/32"

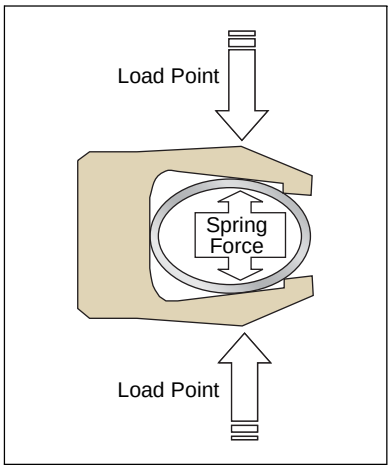

Figure 2-17. Installed State

02/15/08

Parker Hannifin Corporation
EPS Division
Tel: (801) 972-3000
Fax: (801) 973-4019

Helical Springs — H Series

The H Series spring is made from flat ribbon metal strip stock that is formed into a helix shape. The standard material is 17/7 PH stainless steel, and Elgiloy is offered as an option. The finished spring produces a very high load versus deflection curve as shown in **Figure 2-15** on **Page 2-12**.

The helical spring design is intended for static applications due to the high unit load. It can be used in very slow or infrequent dynamic conditions when friction and wear are secondary concerns to positive sealing.

The H series spring produces evenly distributed load across each individual band, with very small gaps between the coils. This tight spacing provides near continuous load, reducing potential leak paths. This, combined with the high unit load, makes the H series well-suited for vacuum and cryogenic applications or when pressure is too low to energize the seal.

The load provided by the H Series spring is directly through its center line. The lip design of the FBN-H profile is a full radius at the sealing interface, providing maximum load to the contact points to effect a tight seal. The spring is welded at the ends. When the seal is compressed into the hardware, the spring cavity is designed to allow axial spring growth.

The relatively small deflection range of the H Series spring prevents it from being used in applications having wide gland tolerances, eccentricity or misalignment. The V or C Series FlexiSeal should be considered for these conditions.

H Series / Helical

Features

- Helical wound ribbon spring with high load vs. deflection
- Standard inch/fractional and MIL-G-5514 sizes
- Standard 17/7 PH stainless steel springs
- NACE compliant Elgiloy springs available
- Available as external & internal pressure face seals

Recommended Applications

- Static rods & pistons
- Static internal & external pressure face seal applications
- Slow dynamic applications <200 sfpm
- Vacuum sealing
- Applications where sealing ability is critical

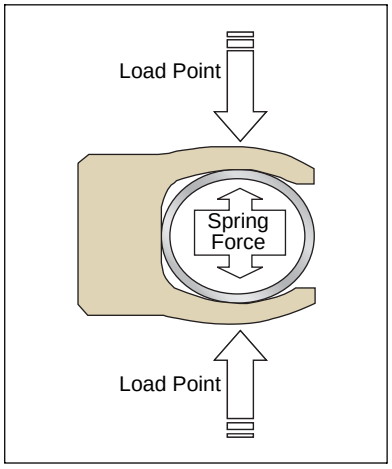

Figure 2-18. Installed State

Parker Hannifin Corporation
EPS Division
Tel: (801) 972-3000
Fax: (801) 973-4019

Lip Shapes

Chamfered Lips

The most common lip shape is the chamfered or back-beveled design and is available with the V and C Series spring types. This design allows for ease of installation and permits lubrication to nest under the lip and feed through in reciprocating dynamic applications. The result is a microscopic film of lubrication that increases seal and hardware service life. Since the footprint (contact point) of a chamfered lip is a single point, all of the sealing force is concentrated on that point, yielding the highest sealability and lowest friction.

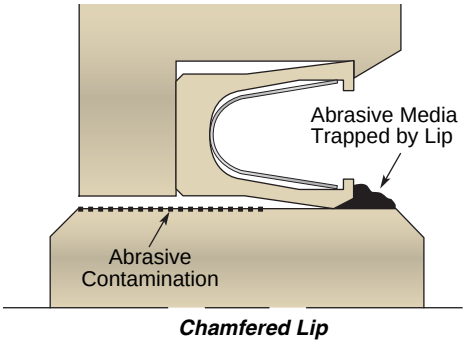

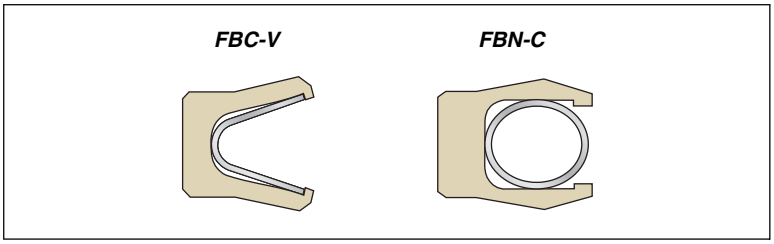

Figure 2-19. Chamfered Lips

Scraper Lips

Applications often involve medias with abrasive particles that can get caught between the seal lip and the mating hardware. This increases wear to both the seal and the mating surface. To prevent particles from accumulating, the scraper lip design is available with all three spring types. The scraper lip contact point is positioned directly over the load point of the spring in each design for maximum scraping action. The scraper lip can be positioned on the ID, OD or both. The scraper lip also stays in place better in a stepped gland where the step is not very large.

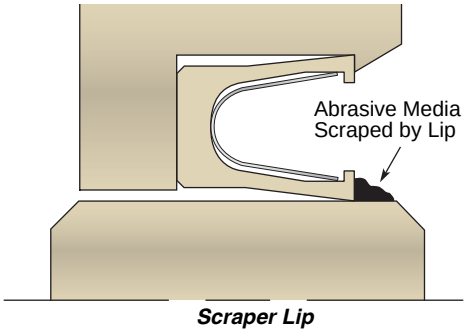

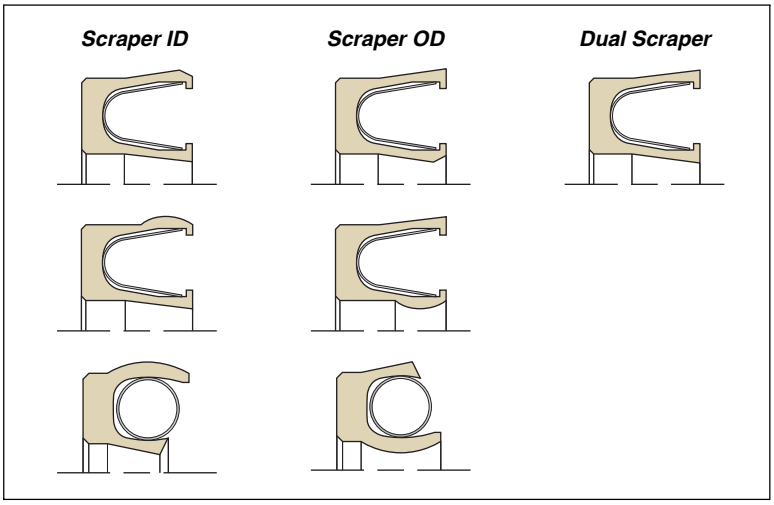

Figure 2-20. Scraper Lips

01/15/06

Parker Hannifin Corporation
EPS Division
Tel: (801) 972-3000
Fax: (801) 973-4019
www.parker.com/eps

Beaded Lips

The beaded shape contacts the surface in much the same way as an O-ring, and is available with the V and H Series spring types. Similar to the chamfered lip, it is easy to install and helps to lubricate the reciprocating sealing surface. In fact, the beaded lip yields a film of oil that is slightly thicker than that of a chamfered lip, making it advantageous for applications with rapid reciprocating motion.

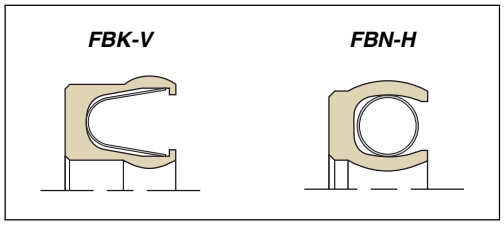

Figure 2-21. Beaded Lips

Rotary Seal Considerations

For all rotary seals — FlexiSeal Rotary, FlexiLip and FlexiCase — the designer must consider:

- pressure and shaft velocity
- lubrication
- shaft misalignment and runout
- shaft hardness and surface finish
- advantages of different lip shapes
- shaft lead
- temperature

Pressure & Shaft Velocity

Unlike reciprocating applications, seals ride on a rotating shaft in only one small area where dynamic forces and energy are concentrated. In fact, much of the energy from the shaft is dissipated at the contact point in the form of frictional heat and wear, both of which are detrimental to seal life. This effect is accentuated by increasing the shaft speed or by increasing the perpendicular force holding the lip against the shaft. Shaft speed can be measured in surface feet per minute and the lip force can be approximated by measuring the differential pressure across the seal in psi. Shaft velocity in surface feet per minute is calculated as follows:

$$\text{Surface Velocity (in sfpm)} = \text{Shaft Diameter (inches)} \times \text{Shaft RPM} \times 0.262$$

One way to estimate the exposure to these risks is to calculate the PV-value by multiplying the pressure held by the seal (***P*** in psi) by the surface velocity of the shaft (***V*** in surface feet per minute). The product of this multiplication provides the designer with a guide to aid in the choice of seal profile and material. Let us run through an example:

Given:
Pressure = 45 psi
Shaft diameter = 1.25"
Shaft rotational speed = 350 RPMs

$$\begin{aligned}\text{Surface Velocity} &= \text{Shaft Diameter} \times \text{Shaft Rotational Speed} \times 0.262\\ &= 1.25'' \times 350\ \text{RPMs} \times 0.262\\ &= 115\ \text{sfpm}\end{aligned}$$

$$\begin{aligned}\text{PV-value} &= \text{Pressure} \times \text{Surface Velocity}\\ &= 45\ \text{psi} \times 115\ \text{sfpm}\\ &= 5175\ \text{ft. lb./in}^2\ \text{min.}\end{aligned}$$

01/15/06

www.parker.com/eps

Parker Hannifin Corporation
EPS Division
Tel: (801) 972-3000
Fax: (801) 973-4019

2

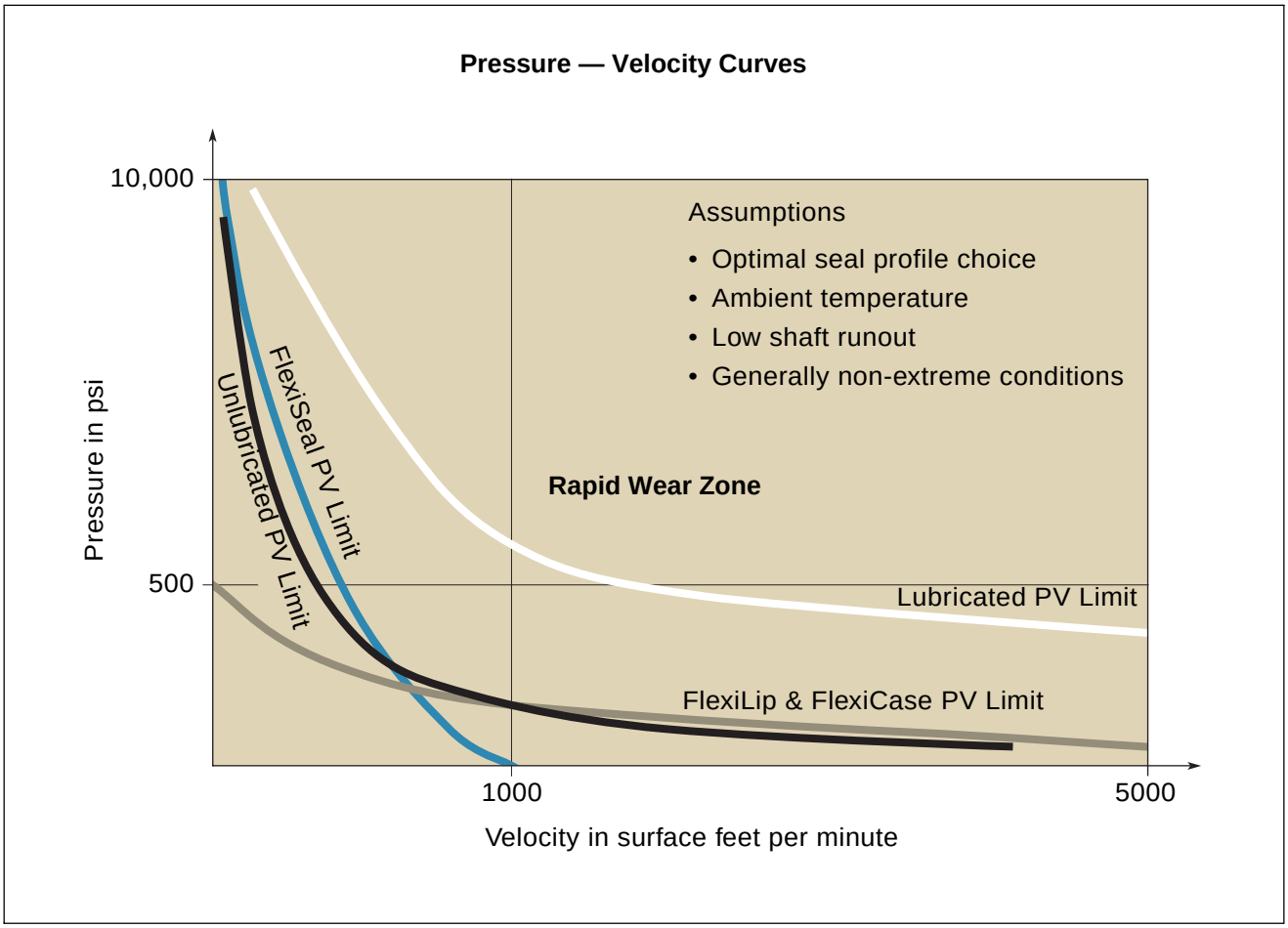

Figure 2-22. Pressure — Velocity Chart

The PV graph in **Figure 2-22** applies to unlubricated rotary applications using a stable rotary seal utilizing a jacket material with a 4 or 5 wear resistance rating. As a rule of thumb, a PTFE rotary seal can be used in unlubricated applications with a PV of up to 150,000. This information is intended to be used only as a guide since there are many other factors, such as sealing media, hardware material and surface finish, which affect the wear life of the seal. Remember, anything that can be done to decrease the heat generation between the lip and the shaft will likely increase seal life. In cases where the media being sealed is a lubricant, these seals can operate continuously at higher PV levels.

Lubrication

While FlexiSeals made of PTFE have a natural lubricity and can be used in unlubricated applications, it is always better to have lubrication present in rotary applications. A film of lubricant between the seal lip and the shaft reduces seal wear and frictional heat generation, makes higher surface speeds possible, and helps prevent the seal from wearing a groove in the shaft. When the lubricant splashes or flows past the seal area, it acts as a coolant, prolonging seal life.

Rotary Product Choice

While the black and white curves above attempt to draw the line between what can and cannot be done, they do not show which profiles work best within the limits of feasibility. The blue and brown curves above show which product lines work better with regard to pressure and surface speed assuming there is no lubrication. Rotary FlexiSeals can be used when pressures are high and speeds are low, while FlexiLip and FlexiCase profiles lend themselves more to applications with high surface speeds and low pressure.

02/15/08

Parker Hannifin Corporation
EPS Division
Tel: (801) 972-3000
Fax: (801) 973-4019

Shaft Misalignment and Runout

Applications with rotating shafts come with their own set of common problems. Among these are those associated with the shaft not being aligned properly with the surrounding hardware. Misalignment most commonly manifests itself as Eccentricity and Runout. Every shaft has some degree of both as described in **Figure 2-23**.

Eccentricity of a rotating shaft creates two problems. One is that it forces the seal lip to follow a shaft that is not centered in the bore, wearing the lip more on one side. The second potential problem is that it enlarges the extrusion gap on one side, which could be detrimental if high pressure is involved. Please refer to **Figure 2-23** for a graphic representation.

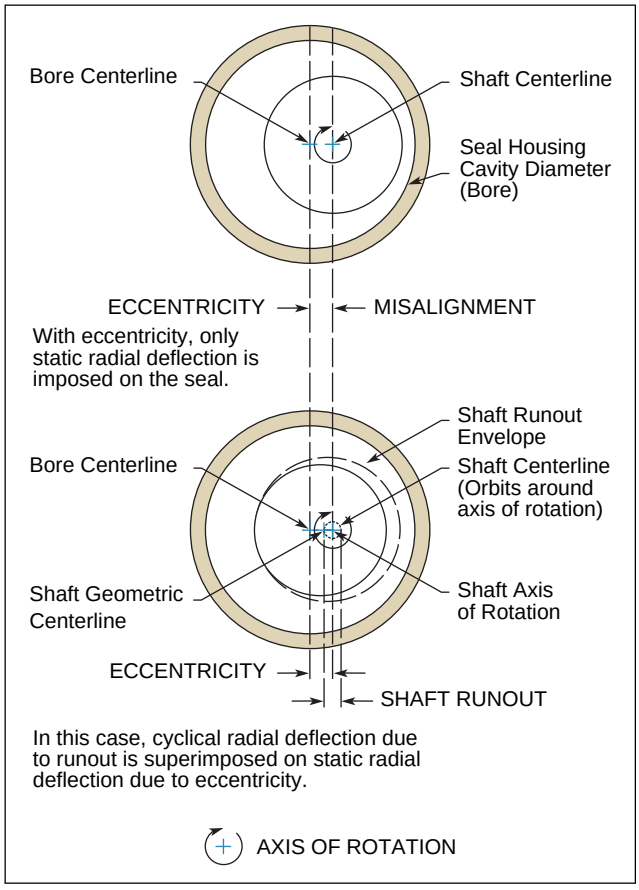

Figure 2-23. Eccentricity and Shaft Runout

Shaft Runout is when the shaft is spinning on an axis of rotation that is offset from the geometric center of the shaft at the point of seal lip contact. Runout can be caused by a bent shaft or by whirling deflection while spinning. The seal must be sufficiently compliant to maintain contact with the shaft despite being compressed and extended each revolution. It follows that shaft runout becomes more of a problem at high speeds.

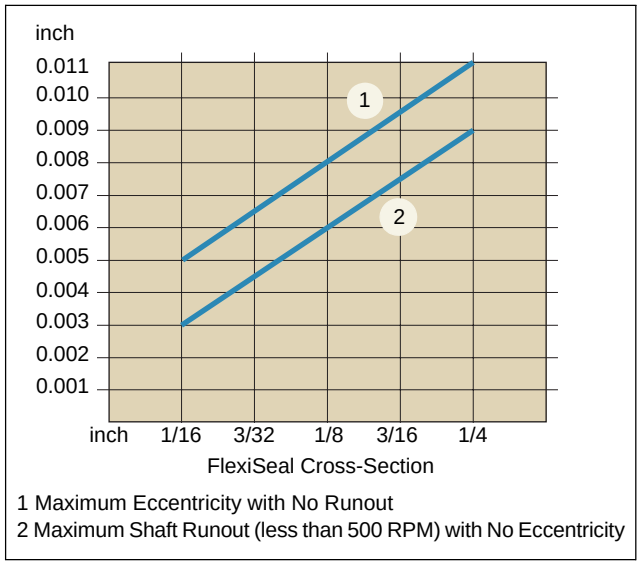

Figure 2-24. FlexiSeal Eccentricity and Runout Limits

All rotating shafts have eccentricity and runout to some degree. The risk of failure increases significantly if a system has a considerable amount of both. **Figure 2-24** shows the acceptable maximum for these parameters for all rotary FlexiSeal profiles except the FFN-H. **Figure 2-25** shows the limits for FlexiLip and FlexiCase profiles.

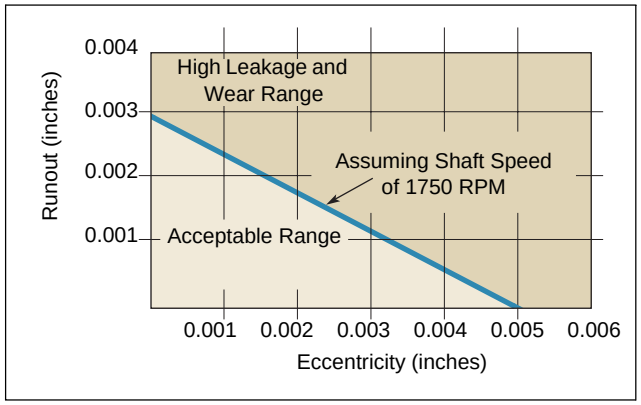

Figure 2-25. FlexiLip and FlexiCase Eccentricity and Runout Limits

01/15/06

Parker Hannifin Corporation
EPS Division
Tel: (801) 972-3000
Fax: (801) 973-4019
www.parker.com/eps

Lip Shapes

FlexiSeal Rotary profiles are characterized by their lip shapes. Chamfered lips maximize sealability while minimizing friction. Scraper lips prevent particles from accumulating at the lip, which makes wash-downs more effective.

Shaft Machine Lead

When a shaft is turned to size, a continuous spiral groove is imparted on the shaft as the cutting bit traverses the shaft. If not removed by plunged grinding, the groove will act as an auger when the shaft rotates and will either pump oil under the seal lip or contaminates into the bearing housing, depending on the direction of the shaft rotation.

Fortunately it is easy to check for the presence of machine lead on a shaft. Hang a weighted string from the shaft and measure the axial distance it moves per shaft revolution. The lead needs to be kept to less than 0.05 degrees. Please refer to *RMA Handbook OS-1* for measurement guidelines.

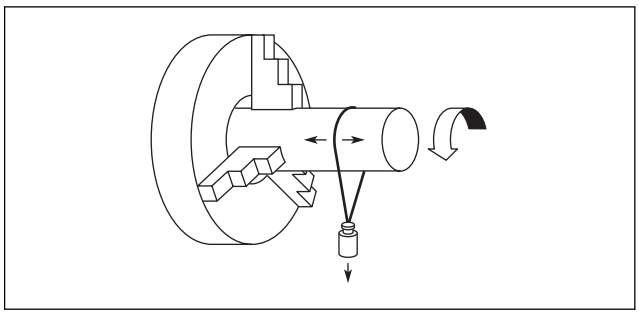

Figure 2-26. String Test for Shaft Lead

Parker Hannifin Corporation
EPS Division
Tel: (801) 972-3000
Fax: (801) 973-4019

Parker EPS has over 300 PTFE compounds and polymeric materials for the manufacture of FlexiSeal®, FlexiLip™ and FlexiCase™ seals. Our material offering includes non-filled PTFE, standard and specialty filled PTFE compounds, TFM blends, UHMW polyethylene and thermoplastic elastomers. Parker can meet your seal material requirements for PTFE sealing in most all environmental and operating conditions.

If your application demands unique material specification, our in-house chemists have the expertise and capability to work with you in specifying and validating optimal materials to meet your requirements.

Advantages of PTFE as a Jacket Material

Low Friction

The low coefficient of friction (.06) of PTFE material results from low interfacial forces between its surface and other materials that it may come in contact with. This behavior of PTFE material reduces any possibility of stick-slip effects in dynamic sealing applications.

Wide Temperature Range (-450 to 600 °F)

PTFE's high melting point and morphological characteristics allow components made from the resin to be used continuously at service temperatures to 600 °F. Above this temperature the components' physical properties tend to decrease, causing heat-aging and material degradation. The polymer itself might remain unaffected, if the temperature is insufficient for thermal degradation. For sealing cryogenic fluids down to -450 °F, special designs using PTFE and other fluoropolymers are available.

Chemical Compatibility

The intrapolymer chain bond strengths of PTFE compounds preclude reaction with most chemicals, thereby making them chemically inert at elevated temperatures and pressures with virtually all industrial chemicals and solvents. For a comparison of compatibility ratings for PTFE compound with other plastics and elastomers, refer to the chemical compatibility charts in **Appendix C**.

Dry Running Capability

Due to the strength of the carbon-fluorine and carbon-carbon single bonds, PTFE compounds have high thermal stability and self-lubricating capabilities, offering continuous dry running ability in dynamic sealing applications.

Temperature Cycling

Unlike most elastomers, PTFE compounds have the unique ability to resist material degradation, heat-aging and alteration in physical properties during temperature cycling.

High Surface Speeds

The low friction characteristics and resistance to heat of PTFE makes it the ideal candidate for high surface speed applications. PTFE compounds perform exceptionally well in high surface speed sealing applications where O-rings or U-cups made of elastomers fail due to heat generation.

Parker Hannifin Corporation
EPS Division
Tel: (801) 972-3000
Fax: (801) 973-4019

Enhancing Performance of PTFE with Fillers

An important requirement for any potential PTFE filler is that it must be able to withstand the sintering temperatures of PTFE. Sintering involves exposure to temperatures close to 700 °F for several hours.

A number of other fillers are used in combination with PTFE. For best results for your sealing applications, please contact the EPS Division Application Engineering team at (801) 972-3000.

0102 — Pigmented Virgin PTFE

Same basic properties as virgin, but with increased wear and creep resistance and lower gas permeability.

0307 — Carbon-Graphite Filled

Carbon reduces creep, increases hardness and elevates thermal conductivity of PTFE. Carbon-graphite compounds have good wear resistance and perform well in non-lubricated applications.

0502 — Carbon Fiber Filled

Carbon fiber lowers creep, increases flex and compressive modulus and raises hardness. Coefficient of thermal expansion is lowered and thermal conductivity is higher for compounds of carbon fiber filled PTFE. Ideal for automotive applications in shock absorbers and water pumps.

0601 — Aromatic Polyester Filled

Aromatic polyester is excellent for high temperatures and has excellent wear resistance against soft, dynamic surfaces. Not recommended for sealing applications involving steam.

0204 — Molybdenum Disulfide and Fiberglass Filled

Molybdenum disulfide increases the hardness of the seal surface while decreasing friction. It is normally used in small proportions combined with other fillers such as glass. MoS_2 is also inert towards most chemicals.

0203 — Fiberglass Filled

Glass fiber has a positive impact on creep performance of PTFE. It also adds wear resistance and offers good compression strength.

0301 — Graphite Filled

Since graphite is often used as a lubricant, it does not significantly increase the coefficient of friction of PTFE when used as a filler. The low friction allows the compound to be used when both shaft speed and pressure are high. Graphite also is chemically inert which enables its use in corrosive medias.

0120 — Mineral Filled

Mineral is ideal for improved upper temperatures and offers low abrasion to soft surfaces. PTFE with this filler can easily be qualified to FDA and other food-grade specifications.

0405 — Stainless Steel Filled

Although stainless steel filler is very abrasive, this compound has excellent extrusion and high temperature resistance in static and slow dynamic applications.

0615 — Proprietary Low Wear PTFE

This proprietary filled PTFE offers low wear and friction properties, used in general applications where long life is required. Not recommended for applications with abrasive media.

01/15/06

Rev. 10/2021

Parker Hannifin Corporation
EPS Division
Tel: (801) 972-3000
Fax: (801) 973-4019

Features of Other Machinable Plastics

UHMW Polyethylene

- Temperature Range -360 to 180 °F
- Excellent wear and abrasive resistance
- Good lubricity in water
- Excellent sealing of light gases at low pressures
- Excellent high pressure extrusion resistance
- Moderate abrasion to soft hardware
- Excellent wear resistance in reciprocating applications

Hytrel®* Thermoplastic (TPE) Elastomer

- Temperature Range -80 to 275 °F
- Excellent wear and extrusion resistance
- Excellent sealing of light gases at low pressures
- Excellent high pressure extrusion resistance
- Low abrasion to soft dynamic hardware material
- Minimum dynamic surface hardness 25 Rc
- Excellent wear resistance in reciprocating applications
- Good wear resistance in rotary applications

Polychlorotriflouroethylene (PCTFE)

- Excellent electrical properties
- Stable for continuous usage until 400 °F
- Low creep at room temperature

Polyetheretherketone (PEEK)

- Chemically inert
- Very strong and rigid
- Temperature range -80 to 500 °F
- Excellent abrasion resistance

*Hytrel® is a registered trademark of DuPont.

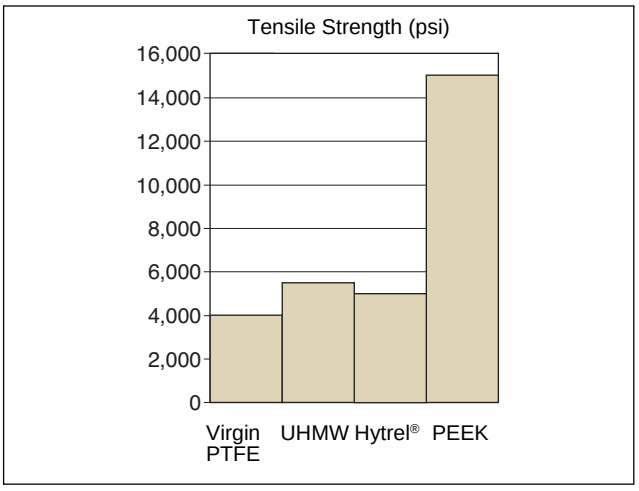

Figure 3-1. Ultimate Tensile Strength (psi)

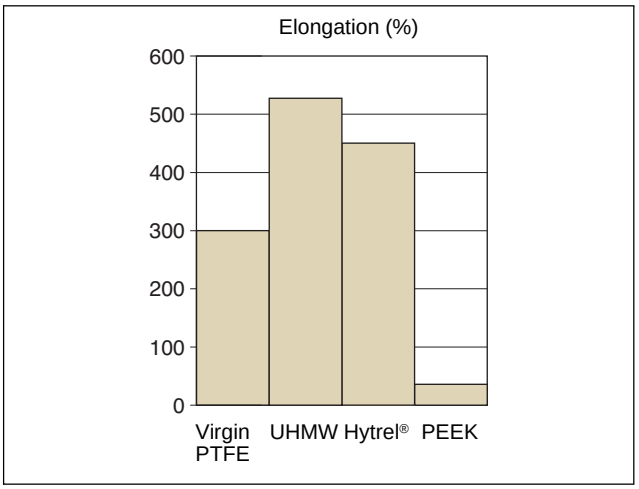

Figure 3-2. Ultimate Elongation (%)

01/15/06

Parker Hannifin Corporation
EPS Division
Tel: (801) 972-3000
Fax: (801) 973-4019
www.parker.com/eps

3

Table 3-1. FlexiSeal Materials — Typical Physical Properties

Parker Material Code	Material	Color	Typical Applications & Description	Service Temperature Range (°F)	Tensile Strength in psi at Break	Elongation in %	Hardness-Shore D
0100	Virgin PTFE	White	Excellent for cryogenic applications. Good for gases.	-425 to +450	4575	400	60
0102	Pigmented PTFE	Turquoise	Lower creep, reduced permeability and good wear resistance.	-320 to +450	4600	390	60
0203	Fiberglass Filled PTFE	Gold	Excellent compressive strength and good wear resistance.	-200 to +575	3480	190	67
0204	Fiberglass & Moly Filled PTFE	Gray	Excellent for extreme conditions such as high pressure & temperature and for longer wear life on hardened dynamic surfaces.	-200 to +575	3100	245	62
0307	Carbon-Graphite Filled PTFE	Black	Excellent wear resistance and reduced creep.	-250 to +575	2250	100	64
0301	Graphite Filled PTFE	Black	Excellent for corrosive service. Low abrasion to soft shafts. Good in unlubricated service.	-250 to +550	3200	260	60
0502	Carbon Fiber Filled PTFE	Brown	Good for strong alkali and hydrofluoric acid. Good in water service.	-200 to +550	3200	150	60
0120	Mineral Filled PTFE	White	Excellent low abrasion to soft surfaces & improved upper temperature performance.	-250 to +550	4070	270	65
0601	Aromatic Polyester Filled PTFE	Tan	Excellent high temperature capabilities & excellent wear resistance.	-250 to +550	2500	200	61
0405	Stainless Steel Filled PTFE	Gray	Excellent extrusion resistance at high temperatures and pressures.	-250 to +600	2200	190	72
0913	Hytrel®* Unlubricated Thermoplastic Elastomer	Natural	Excellent in gases and most hydraulic fluids. Good abrasion resistance with high wear properties.	-80 to +275	5800	500	55
0901	UHMW Polyethylene	Translucent	High wearing plastic for use in abrasive medias. Excellent in water-based medias, but restricted chemical and heat resistance.	-320 to +200	6000	325	67
0615	Proprietary Low Wear PTFE	Purple	Excellent low wearing material. Kind to soft mating surfaces in the Rb range.	-250 to +550	3470	200	63
0127	Mineral Filled PTFE — FDA compliant for rotary applications	White	FDA compliant materials for sanitary food and pharmaceutical processing.	-250 to +550	2800	250	66
0128	Mineral Filled PTFE — Antimicrobial	White	FDA material with an antimicrobial agent added to prevent bacterial growth.	-250 to +550	2800	250	66

*Hytrel® is a registered trademark of DuPont.

.

Parker Hannifin Corporation
EPS Division
Tel: (801) 972-3000
Fax: (801) 973-4019

Parker Material Code	Coefficient of Friction	Thermal Conductivity in W/mK	Coefficient of Thermal Expansion in/in/°F x 10^{-5} at 203°F	Permanent Deformation Under Load 70 °F 2000 psi in %	Chemical Compatibility Rating	Wear Resistance Rating	High Pressure/ Extrusion Resistance Rating	FDA/NSF Compliant
					5 = Excellent 1 = Fair			
0100	0.05 – 0.10	0.30	6.1	7.0	5	1	1	Yes
0102	0.05 – 0.10	0.29	6.1	6.9	5	2	2	Yes
0203	0.08 – 0.12	0.27	5.6	6.0	5	5	5	No
0204	0.08 – 0.12	0.28	6.1	6.0	5	4	4	No
0307	0.08 – 0.11	0.35	4.4	2.5	5	4	4	No
0301	0.07 – 0.09	0.39	6.1	3.5	5	4	3	No
0502	0.09 – 0.12	0.31	7.2	1.8	4	5	5	No
0120	0.08 – 0.12	0.23	6.1	4.2	5	3	4	Yes
0601	0.09 – 0.13	0.32	5.0	5.5	4	4	4	No
0405	0.30 – 0.34	0.40	4.4	3.6	5	4	5	No
0913	0.18 – 0.30	0.16	11.7	—	2	4	5	Yes
0901	0.17 – 0.22	—	11.0	7.1	3	5	5	Yes
0615	0.09 – 0.12	0.30	5.0	3.2	5	5	3	No
0127	0.07 – 0.10	0.30	6.1	5.5	5	3	4	Yes
0128	0.07 – 0.10	0.30	6.1	5.3	5	3	4	Yes

Note: We emphasize that this tabulation should be used as a guide only.

It is based primarily on laboratory and service tests, but does not take into account all variables that can be encountered in actual use. Therefore, it is always advisable to test the material under actual service conditions before specification. If this is not practical, tests should be devised that simulate service conditions as closely as possible.

Parker EPS Division also offers unique material blends and recipes along with a wide variety of other PTFE filler combinations and colors to enhance seal performance in the most extreme application needs. For guidance on material selection for extreme applications, please contact an EPS Division PTFE Application Engineer at 801-972-3000.

02/15/08

www.parker.com/eps

Parker Hannifin Corporation
EPS Division
Tel: (801) 972-3000
Fax: (801) 973-4019

Spring Materials

Table 3-2. Spring Materials

Spring Material	Application
300 Series Stainless Steel (Cantilever — 301 SS) (Canted Coil — 302 SS)	General purpose spring material for most fluids up to 600 °F. It is recommended to 400 °F in corrosive media.
17-7PH Stainless Steel (Helical)	17-7PH exhibits better retention of mechanical properties at temperatures over 400 °F than 300 series stainless steel.
Elgiloy® (Cantilever and Helical)	NACE approved. Recommended for applications above 500 °F and is corrosion resistant in salt water or severe media.
C-276 alloy (Canted Coil and Helical)	Resistant in severely corrosive or milder fluids when temperatures exceed 400 °F.

Table 3-3. Spring Loads Available by Cross-Section

Seal	Spring Cross-Section	Spring Load	Spring Material Available	Cross-Section Available				
				062	093	125	187	250
FlexiSeal V Series		**M**	S = 301 Stainless E = Elgiloy®	✔ ✔	✔ ✔	✔ ✔	✔ ✔	✔ ✔
FlexiSeal C Series		**L** **M** **H**	S = 302 Stainless H = C-276 alloy	✔ ✔	✔ ✔	✔ ✔	✔ ✔	✔ ✔
FlexiSeal H Series		**H**	S = 17-7PH Stainless E = Elgiloy®	✔ ✔	✔ ✔	✔ ✔	✔ ✔	✔ ✔

L = Light
M = Medium
H = Heavy

02/15/08

Parker Hannifin Corporation
EPS Division
Tel: (801) 972-3000
Fax: (801) 973-4019
www.parker.com/eps

Product Line

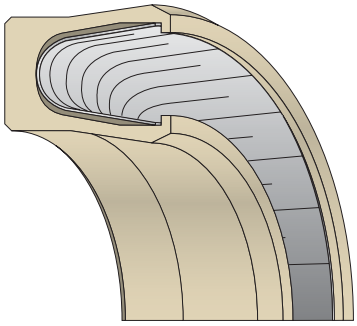

FlexiSeal

PTFE FlexiSeal®

The FlexiSeal is a spring-energized U-cup utilizing a variety of jacket profiles, spring types and materials in Rod & Piston, Face and Rotary seal configurations. FlexiSeals are used where elastomeric seals fail to meet the temperature range, chemical resistance or friction requirements. Jacket profiles are made from PTFE and other high performance polymers. Spring types are available in corrosion-resistant metal alloys, including stainless steel, Elgiloy® and C-276 alloy. Standard FlexiSeals are precision machined to fit inch/fractional and MIL-G-5514 glands. Standard and custom sizes in multiple geometries are available from 1/8" to 72" diameters.

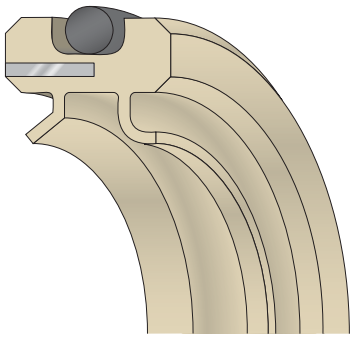

FlexiLip

FlexiLip™

FlexiLip seals are rotary seals incorporating a deflected lip seal geometry. Anti-rotational devices such as flanges and O-rings are often utilized to prevent the seal from rotating with the shift. Standard and custom sizes are available with a wide selection of PTFE materials. FlexiLip seals are suitable for sealing corrosive and abrasive media. A wide range of geometries and materials are available, depending on specific application requirements. FlexiLip seals are often used when quantities are small (<100pc/yr) and it is difficult to justify tooling costs for a FlexiCase solution.

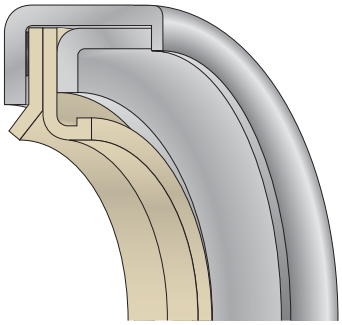

FlexiCase

FlexiCase™

The FlexiCase seal is a metal-cased rotary lip seal suitable for applic lip seals fail and mechanical seals PTFE element provides greater der temperature ranges, higher pr nger life than elastomeric lip se

- Can run in dry nments
- Are available in designs
- Are designed t re

DISCONTINUED

FlexiCase™ Products have been discontinued as a standard (catalog) offering from Parker EPS Division effective 12/2020.

To find your local Authorized Distributor that may offer a substitute product, click on the "Where to Buy" link or visit

www.parker.com/eps/wheretobuy

WHERE TO BUY

02/15/08 Rev. 12/2020

Parker Hannifin Corporation
EPS Division
Tel: (801) 972-3000
Fax: (801) 973-4019

Master Decision Tree

Don't know which of the 66 standard profiles best fits your application? Just start at the left and begin answering the basic application questions in the decision tree. Follow the tree through, and it will guide you to the profile that should be the best fit for your application.

The decision trees in this guide are to be used as an engineering guide only. Often several other parameters must be considered to optimize seal design. Contact Parker's PTFE Engineering Team for confirmation of your choice or further recommendations. Parker also recommends that any seal be tested in the application conditions before releasing for production.

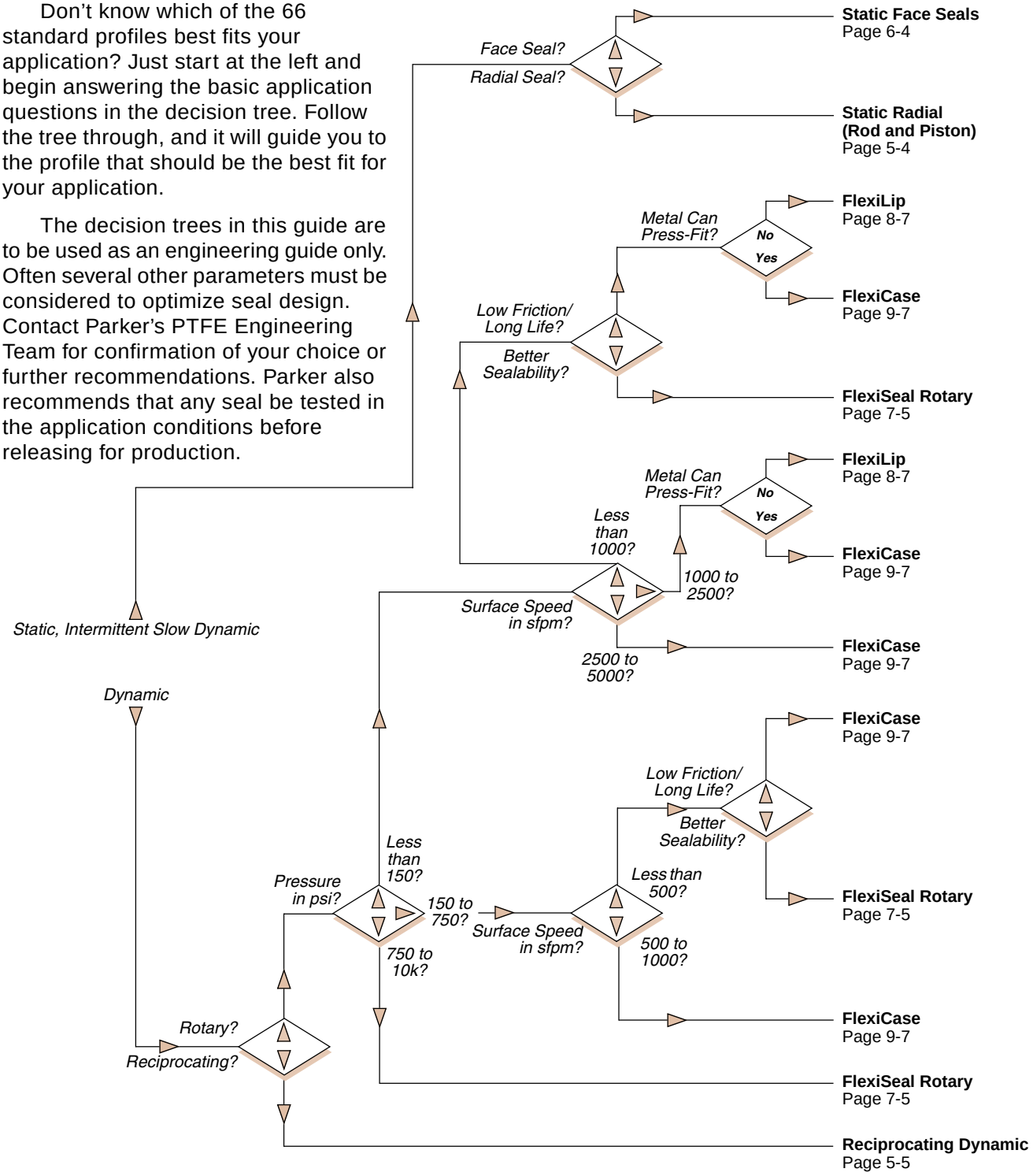

01/15/06

Parker Hannifin Corporation
EPS Division
Tel: (801) 972-3000
Fax: (801) 973-4019

Part Number Nomenclature — FlexiSeal

Table 4-1. FlexiSeal Part Number Nomenclature

English

0	5	0	2	FB	S	1	2	5	0	0	5	0	0	1	7	0	S	C	L

4-Digit Material Code
Examples:
0502 = Carbon Fiber Filled PTFE
0203 = Fiberglass Filled PTFE

FlexiSeal Gland Type Classification
FB = Inch/Fractional or Metric Rod & Piston
FE = External Face Seal
FI = Internal Face Seal
FC = Rotary Shaft — Centered O-Ring FH = Rotary Shaft — O-Ring in Heel
FF = Rotary Shaft — Flanged

Lip Style Designation
N = Default Lip Style
C = Chamfered ID & OD
S = Scraper ID
G = Scraper OD
D = Dual Scraper
K = Beaded ID & OD
L = Beaded ID & Scraper OD
M = Scraper ID & Beaded OD

Gland Cross-Section
Examples:
062 = 0.062"
093 = 0.093"
125 = 0.125"
187 = 0.187"
250 = 0.250"

Gland Inside Diameter (Rod or Groove Diameter)
Examples:
00500 = 0.500"
02500 = 2.500"
11000 = 11.000"

Seal Height Designation
Examples:
083 = 0.083"
130 = 0.130"
170 = 0.170"
260 = 0.260"
355 = 0.355"

Spring Material
E = ELGILOY
S = Stainless Steel
H = C-276 alloy

Spring Design
V = Cantilever
C = Canted-Coil Spring
H = Helical Spring
W = White silicone filled Cantilever
R = Red silicone filled Cantilever

Spring Load
Blank = No Option (Helical Only)
L = Light
M = Medium
H = Heavy

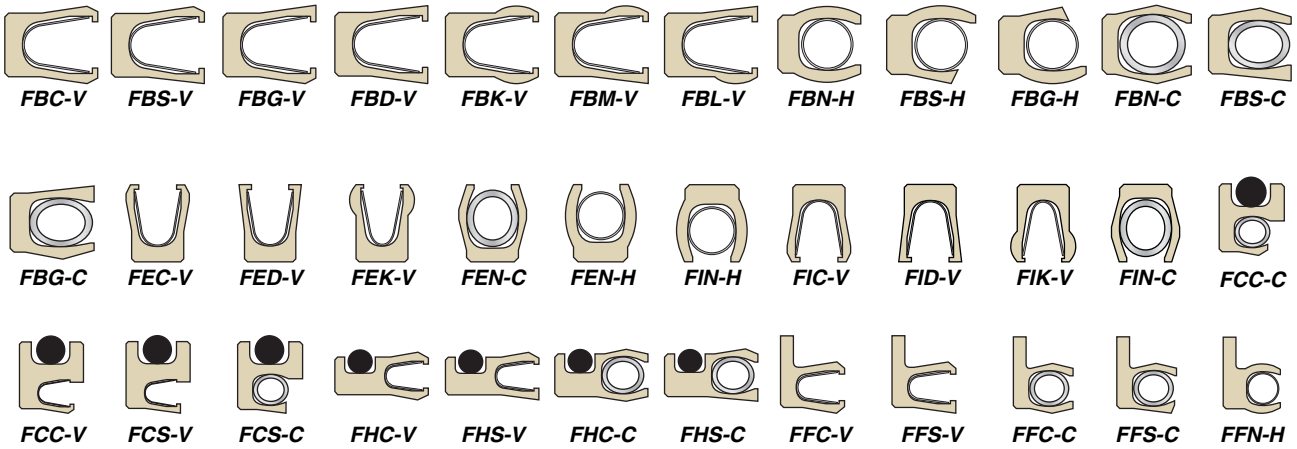

01/2016

Parker Hannifin Corporation
EPS Division
Tel: (801) 972-3000
Fax: (801) 973-4019

Table 4-1. FlexiSeal Part Number Nomenclature (Continued)

Metric

M	5	0	2	FB	S	0	4	0	0	0	6	5	0	0	0	6	7	S	C	L

4-Digit Material Code
Examples:
M502 = Carbon Fiber Filled PTFE
M301 = Graphite Filled PTFE
("M" indicates metric)

FlexiSeal
Gland Type Classification
FB = Inch/Fractional or Metric Rod & Piston
FE = External Face Seal
FI = Internal Face Seal
FC = Rotary Shaft — Centered O-Ring
FH = Rotary Shaft — O-Ring in Heel
FF = Rotary Shaft — Flanged

Lip Style Designation
N = Default Lip Style
C = Chamfered ID & OD
S = Scraper ID
G = Scraper OD
D = Dual Scraper
K = Beaded ID & OD
L = Beaded ID & Scraper OD
M = Scraper ID & Beaded OD

Gland Cross-Section
Examples:
0200 = 2.00 mm
0250 = 2.50 mm
0400 = 4.00 mm
0500 = 5.00 mm
0700 = 7.00 mm

Gland Inside Diameter
(Rod or Groove Diameter)
Examples:
00800 = 8.00 mm
01150 = 11.50 mm
06500 = 65.00 mm

Seal Height Designation
Examples:
021 = 2.1 mm
033 = 3.3 mm
043 = 4.3 mm
066 = 6.6 mm
090 = 9.0 mm

Spring Material
E = ELGILOY
S = Stainless Steel
H = C-276 alloy

Spring Design
V = Cantilever
C = Canted-Coil Spring
H = Helical Spring
W = White silicone filled Cantilever
R = Red silicone filled Cantilever

Spring Load
Blank = No Option (Helical Only)
L = Light
M = Medium
H = Heavy

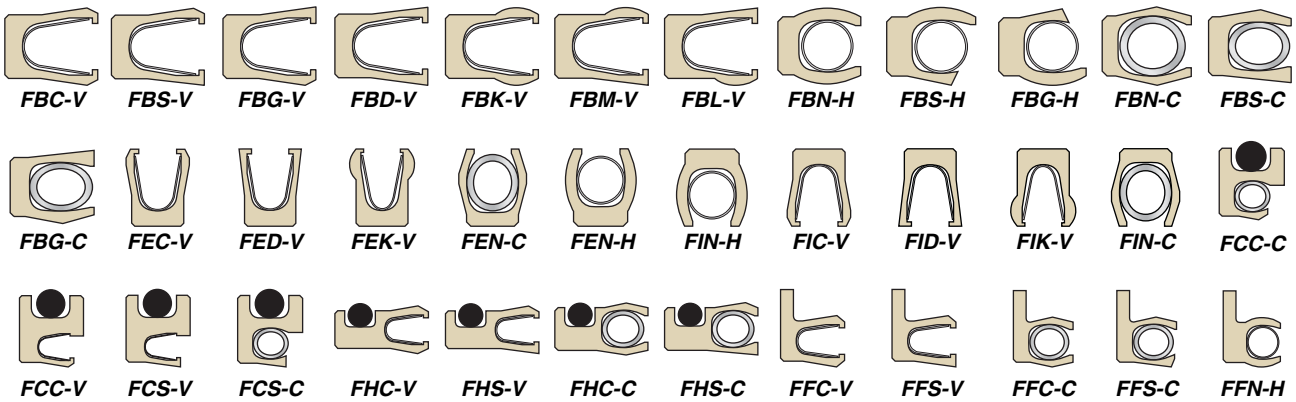

01/2016

Parker Hannifin Corporation
EPS Division
Tel: (801) 972-3000
Fax: (801) 973-4019
www.parker.com/eps

Part Number Nomenclature — FlexiLip

Table 4-2. FlexiLip Part Number Nomenclature

English

0	5	0	2	LF	N	3	7	5	0	2	5	0	0	2	5	0	N	S

4-Digit Material Code
Examples:
0502 = Carbon Fiber Filled PTFE
0301 = Graphite Filled PTFE

FlexiLip Lip Style Designation
LF = Mandrel Formed Lip
LM = Machined Lip
LE = Elf-Shoe Lip
LD = Dual Lips
LG = Garter Spring Lip

Excluder Lip Designation
E = Excluder Lip
N = No Excluder Lip

Gland Cross-Section
Examples:
250 = 0.250"
375 = 0.375"
750 = 0.750"

Shaft Diameter
Examples:
00500 = 0.500"
02500 = 2.500"
11000 = 11.000"

Seal Height
Designation
250 = 0.250"
375 = 0.375"
750 = 0.750"

O-Ring Material
Designation
N= Nitrile (NBR)
V= Fluorocarbon (FKM)
E= EPDM
S= Silicone

Metal Band Designation
S = Stainless Steel Band
N = No Metal Band

Metric

M	5	0	2	LF	N	1	4	0	0	1	2	0	0	0	2	0	0	N	S

4-Digit Material Code
Examples:
M502 = Carbon Fiber Filled PTFE
M301 = Graphite Filled PTFE
("M" indicates metric)

FlexiLip Lip Style Designation
LF = Mandrel Formed Lip
LM = Machined Lip
LE = Elf-Shoe Lip
LD = Dual Lips
LG = Garter Spring Lip

Excluder Lip Designation
E = Excluder Lip
N = No Excluder Lip

Gland Cross-Section
Examples:
0900 = 9.00 mm
1250 = 12.50 mm
1400 = 14.00 mm

Shaft Diameter
Examples:
00505 = 5.05 mm
05050 = 50.50 mm
12000 = 120.00 mm

Seal Height
Designation
090 = 9.0 mm
200 = 20.0 mm
384 = 38.4 mm

O-Ring Material
Designation
N= Nitrile (NBR)
V= Fluorocarbon (FKM)
E= EPDM
S= Silicone

Metal Band Designation
S = Stainless Steel Band
N = No Metal Band

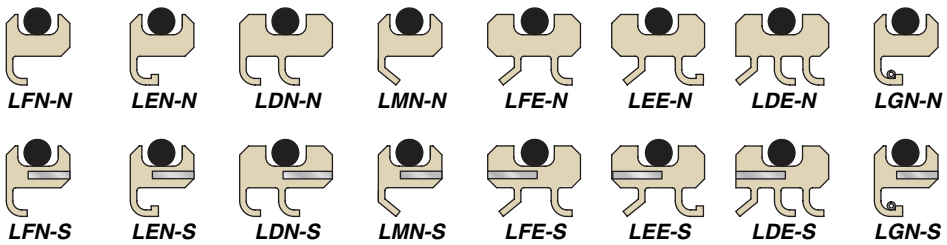

01/15/06

Parker Hannifin Corporation
EPS Division
Tel: (801) 972-3000
Fax: (801) 973-4019
www.parker.com/eps

Part Number Nomenclature — FlexiCase

Table 4-3.

English

0 S

4-Digit M
Exampl
0502 =
0301 =

tion

Metric

M 5 S

4-Digit Ma
Examples:
M502 = Ca
Fil
M301 = Gr
PT
("M" indica

rial

KM)

nation

DISCONTINUED

FlexiCase™ Products have been discontinued as a standard (catalog) offering from Parker EPS Division effective 12/2020.

To find your local Authorized Distributor that may offer a substitute product, click on the "Where to Buy" link or visit

www.parker.com/eps/wheretobuy

WHERE TO BUY

CFE CME CEE CDE CGE CJE CHE

01/15/06

Parker Hannifin Corporation
EPS Division
Tel: (801) 972-3000
Fax: (801) 973-4019

Profiles

Table 4-4. FlexiSeal Rod & Piston Product Profiles

Profile	Features	Recommended Applications
FBC-V	Chamfered ID & OD, Cantilever Spring	Maximum sealability on ID & OD.
FBS-V	Scraper ID, Chamfered OD, Cantilever Spring	Scrapes contamination from rod surface.
FBG-V	Scraper OD, Chamfered ID, Cantilever Spring	Scrapes contamination from bore surface.
FBD-V	Scraper ID & OD, Cantilever Spring	Best overall in contaminated media.
FBK-V	Beaded ID & OD, Cantilever Spring	Beaded lip similar to O-ring contact area.
FBM-V	Scraper ID, Beaded OD, Cantilever Spring	Scrapes contamination from rod surface.
FBL-V	Scraper OD, Beaded ID, Cantilever Spring	Scrapes contamination from bore surface.

Profile	Features	Recommended Applications
FBN-H	Rounded ID & OD, Helical Spring	High radial load increases sealability and friction.
FBS-H	Scraper ID, Rounded OD, Helical Spring	Scrapes contamination from rod surface.
FBG-H	Scraper OD, Rounded ID, Helical Spring	Scrapes contamination from bore surface.
FBN-C 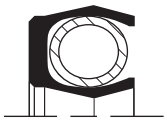	Back-beveled ID & OD, Canted-Coil Spring	Low radial load decreases friction and sealability.
FBS-C 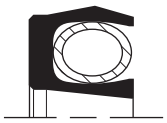	Scraper ID, Chamfered OD, Canted-Coil Spring	Easily snaps into a stepped gland for a piston seal.
FBG-C 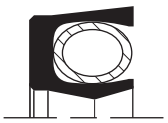	Scraper OD, Chamfered ID, Canted-Coil Spring	Easily snaps into a stepped gland for a rod seal.

See a more detailed product offering for FlexiSeal Rod & Piston Seals on **Page 5-8**.

FlexiSeal Rod & Piston Seals Part Number Example

0	5	0	2	**FB**	**C**	1	2	5	0	0	5	0	0	1	6	0	S	**V**	M

02/15/08

Parker Hannifin Corporation
EPS Division
Tel: (801) 972-3000
Fax: (801) 973-4019
www.parker.com/eps

4

Table 4-5. FlexiSeal Face Product Profiles

Profile	Features	Recommended Applications
FEN-H	Lips Facing Out, Rounded Lips, Helical Spring	Seals external pressure. High sealability and closure force.
FEC-V	Lips Facing Out, Chamfered Lips, Cantilever Spring	Seals external pressure. Good sealability for non-abrasive fluids.
FED-V	Lips Facing Out, Scraper Lips, Cantilever Spring	Seals external pressure. Good sealability for abrasive fluids.
FEK-V	Lips Facing Out, Beaded Lips, Cantilever Spring	Seals external pressure. Good sealability for non-abrasive fluids. Rounded like O-ring.
FEN-C	Lips Facing Out, Back-Beveled Lips, Canted-Coil Spring	Seals external pressure. Low closure force for non-abrasive fluids.

Profile	Features	Recommended Applications
FIN-H	Lips Facing In, Rounded Lips, Helical Spring	Seals internal pressure. High sealability and closure force.
FIC-V 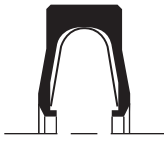	Lips Facing In, Chamfered Lips, Cantilever Spring	Seals internal pressure. Good sealability for non-abrasive fluids.
FID-V 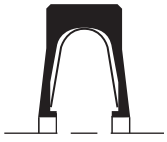	Lips Facing In, Scraper Lips, Cantilever Spring	Seals internal pressure. Good sealability for abrasive fluids.
FIK-V 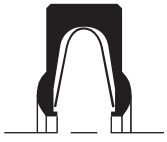	Lips Facing In, Beaded Lips, Cantilever Spring	Seals internal pressure. Good sealability for non-abrasive fluids. Rounded like O-ring.
FIN-C 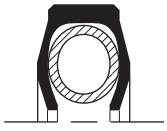	Lips Facing In, Back-Beveled Lips, Canted-Coil Spring	Seals internal pressure. Low closure force for non-abrasive fluids.

See a more detailed product offering for FlexiSeal Face Seals on **Page 6-6**.

FlexiSeal Face Seals Part Number Example

0 3 0 1 FE N 1 2 5 0 1 2 5 0 1 6 0 S H

01/15/06

Parker Hannifin Corporation
EPS Division
Tel: (801) 972-3000
Fax: (801) 973-4019
www.parker.com/eps

Table 4-6. FlexiSeal Rotary Product Profiles

Profile	Features	Recommended Applications
FCC-V	O-Ring Centered in OD, Chamfered ID, Cantilever Spring	Optimum sealability. Available in 0.155" cross-section and higher.
FCS-V	O-Ring Centered in OD, Scraper ID, Cantilever Spring	Minimizes contamination threat. Available in 0.155" cross-section and higher.
FCC-C	O-Ring Centered in OD, Chamfered ID, Canted-Coil Spring	Reduced friction and sealability. Available in 0.155" cross-section and higher.
FCS-C	O-Ring Centered in OD, Scraper ID, Canted-Coil Spring	Low friction with contamination resistance. Available in 0.155" cross-section and higher.
FHC-V	O-Ring in Heel OD, Chamfered ID, Cantilever Spring	Optimum sealability. Available in extended heel option only.
FHS-V	O-Ring in Heel OD, Scraper ID, Cantilever Spring	Minimizes contamination threat. Available in extended heel option only.
FHC-C 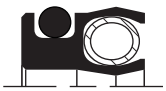	O-Ring in Heel OD, Chamfered ID, Canted-Coil Spring	Reduced friction and sealability. Available in extended heel option only.
FHS-C	O-Ring in Heel OD, Scraper ID, Canted-Coil Spring	Low friction with contamination resistance. Available in extended heel option only.
FFC-V 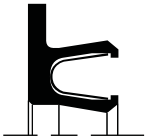	Flanged Heel OD, Chamfered ID, Cantilever Spring	Optimum sealability. Premium bore retention.
FFS-V 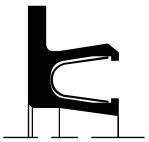	Flanged Heel OD, Scraper ID, Cantilever Spring	Minimizes contamination threat. Premium bore retention.
FFC-C 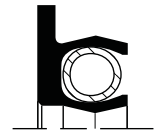	Flanged Heel OD, Chamfered ID, Canted-Coil Spring	Reduced friction and sealability. Premium bore retention.
FFS-C 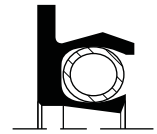	Flanged Heel OD, Scraper ID, Canted-Coil Spring	Low friction with contamination resistance. Premium bore retention.
FFN-H	Flanged Heel OD, Rounded ID, Helical Spring	Static or intermittent rotary only. High sealability and friction.

See a more detailed product offering for FlexiSeal Rotary Seals on **Page 7-7**.

FlexiSeal Rotary Seals Part Number Example

0 5 0 2 **FC** **C** 1 2 5 0 0 5 0 0 1 6 0 S **V** M

rev. 02/01/2019

02/15/08

Parker Hannifin Corporation
EPS Division
Tel: (801) 972-3000
Fax: (801) 973-4019

4

Table 4-7. FlexiLip Product Profiles

Profile	Features	Recommended Applications
LFN-N 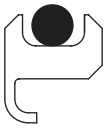	Formed Primary Lip	Multipurpose Seal
LFE-N 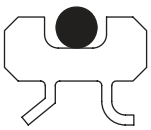	Formed Primary Lip w/ Excluder Lip	Multipurpose Seal
LMN-N 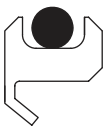	Machined Primary Lip	Low Friction
LEN-N 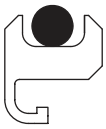	Elf-Toe Primary Lip	Abrasive Media
LEE-N 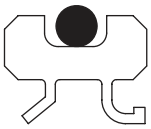	Elf-Toe Primary Lip w/ Excluder Lip	Abrasive Media
LDN-N 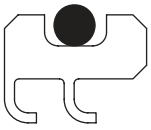	Dual Primary Lips	Oil Seal — Flooded, Severe Splash
LDE-N 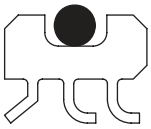	Dual Primary Lips w/ Excluder Lip	Oil Seal — Flooded, Severe Splash
LGN-N 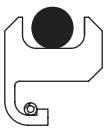	Primary Lip Energized with Garter Spring	0.020" > TIR > 0.005"

Profile	Features	Recommended Applications
LFN-S 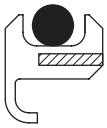	Formed Primary Lip w/ Metal Band	Multipurpose Seal
LFE-S 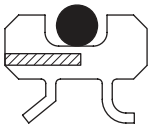	Formed Primary Lip w/ Excluder Lip w/ Metal Band	Multipurpose Seal
LMN-S 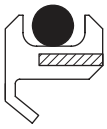	Machined Primary Lip w/ Metal Band	Low Friction
LEN-S 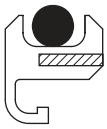	Elf-Toe Primary Lip w/ Metal Band	Abrasive Media
LEE-S 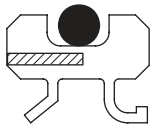	Elf-Toe Primary Lip w/ Excluder Lip w/ Metal Band	Abrasive Media
LDN-S 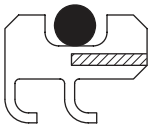	Dual Primary Lips w/ Metal Band	Oil Seal — Flooded, Severe Splash
LDE-S 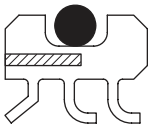	Dual Primary Lips w/ Excluder Lip w/ Metal Band	Oil Seal — Flooded, Severe Splash
LGN-S 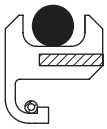	Primary Lip Energized with Garter Spring w/ Metal Band	0.020" > TIR > 0.005"

See a more detailed product offering for FlexiLip Seals on **Page 8-8**.

FlexiLip Seals Part Number Example

0 5 0 2 — LF N — 2 5 0 — 0 0 5 0 0 — 2 5 0 — N — N

01/15/06

Parker Hannifin Corporation
EPS Division
Tel: (801) 972-3000
Fax: (801) 973-4019
www.parker.com/eps

Table 4-8. FlexiCase Product Profiles

Profile	Features	Recommended Applications	Profile	Features	Recommended Applications
CFN 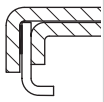					sealing or other e eeps out.
CFE					shaft 010" to brasive
CMN 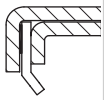					shaft 010" to brasive ps water
CME 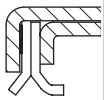					edundant eeded & t is 020" or edia.
CEN 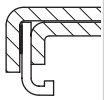					edundant eeded & t is 020" or edia. r & dirt
CEE					seal for re ther low stems.
CDN					seal for re ther low stems. r & dirt

e Seals

FlexiCase

DISCONTINUED

FlexiCase™ Products have been discontinued as a standard (catalog) offering from Parker EPS Division effective 12/2020.

To find your local Authorized Distributor that may offer a substitute product, click on the "Where to Buy" link or visit

www.parker.com/eps/wheretobuy

WHERE TO BUY

01/15/06

Parker Hannifin Corporation
EPS Division
Tel: (801) 972-3000
Fax: (801) 973-4019

Notes

Parker Hannifin Corporation
EPS Division
Tel: (801) 972-3000
Fax: (801) 973-4019

www.parker.com/eps

FlexiSeal® Rod & Piston Seals
Introduction

Contents

Engineering 5-2
Materials 5-3
Product Offering 5-4
FlexiSeal Rod & Piston
- FB Profiles — Inch/Fractional 5-10
- FB Profiles — Metric 5-17
- FR Profiles — MIL-G-5514 Rod 5-19
- FP Profiles — MIL-G-5514 Piston 5-24

FlexiSeals

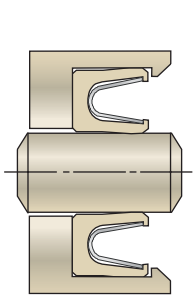

Rod Gland

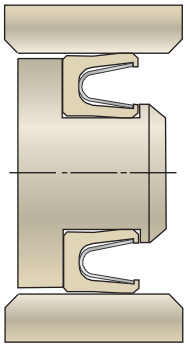

Piston Gland

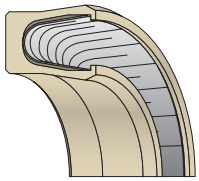

Chamfered Rod/Piston Seal with Cantilever Spring

Where can the reciprocating FlexiSeal be found?

The Parker FlexiSeal was not specifically designed for just one industry or application. The chemical and physical properties of its compounds make it a powerful problem-solver in many situations. The seals always seem to gravitate toward certain difficult applications which include:

- Harsh chemicals and solvents
- High temperatures up to 600 °F
- Cryogenic temperatures down to -450 °F
- Unlubricated applications
- Where low friction is required
- High pressures up to 10,000 psi
- High surface speeds when other seals overheat
- Where there's no margin for tooling cost
- Where there are custom, "in-between" sizes

Applications

The FlexiSeal's versatility makes it suitable for a wide range of applications including:

- Compressors
- Cryogenics
- FDA Clean Grade
- Jet Engines
- Hydraulic Cylinders
- Paint Sprayers
- Pressure Washers
- Robotics
- Steering Cylinders
- Valves
- Vapor Recovery Systems
- Many more

Markets

Since the FlexiSeal solves problems along several parameters, it can be found in virtually every market including:

- Aerospace
- Automotive
- Chemical Processing
- Appliances
- Machine Tools
- Marine
- Medical
- Pharmaceutical
- Military
- Heavy Machinery
- Pulp & Paper
- Hydraulic
- Food & Beverage
- Electronic
- Oil & Gas
- Semiconductor
- Plastics

01/15/06

Parker Hannifin Corporation
EPS Division
Tel: (801) 972-3000
Fax: (801) 973-4019
www.parker.com/eps

Choosing the Right Design

While choosing the right rod or piston FlexiSeal for your application, you need to consider the gland's configuration and intended installation, the finish and hardness of the mating surface, the pressure it will be subjected to, and the advantages of different spring choices and lip shapes.

Hardware Configuration and Installation

FlexiSeals are available for two-piece, stepped and closed gland configurations. We recommend a two-piece gland design for rod and piston applications for its ease of installation. The step-cut design may be used when the seal sees pressure from the open or spring side of the seal. A closed gland may only be used if it is possible to stretch or compress the seal into position. For details on these configurations and installation considerations, see **Page 2-3**.

Surface Finish

The optimum surface finish for FlexiSeals depends on the media to be sealed. To maximize seal performance and life, follow our recommendations on **Page 2-9**.

Pressure

The standard FlexiSeal is rated to 3000 psi when used in glands conforming to recommended dimensions and using the materials that meet the temperature requirements of the application, while a FlexiSeal with an extended heel can hold up to 10,000 psi. See **Page 2-10** for more detailed recommendations regarding pressure ratings.

Spring Choices

FlexiSeal Rod and Piston Seals are available with three different spring types to energize the jacket: V-shaped cantilever springs (V Series), canted-coil springs (C Series) and helical wound-ribbon springs (H Series). Details on each of their features can be found beginning on **Page 2-12**. An O-ring energizer can easily be substituted as a custom design.

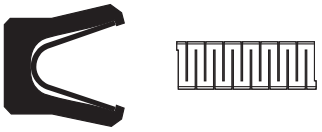

V Series / Cantilever

C Series / Canted Coil

H Series / Helical

Table 5-1. Recommended Applications for FlexiSeal Rod and Piston Springs

V Series	C Series	H Series
reciprocating rod and piston	reciprocating rod and piston	static rod and piston
wide tolerance and misaligned glands (static)	wide tolerance and misaligned glands (static)	very slow dynamic seals (<150 sfpm)
abrasive media (when scraper lip is designated)	friction critical and very small diameter applications	applications where sealability is critical

Lip Shapes

FlexiSeals can be optimized by changing their lip shapes. Chamfered lips contact the mating surface at a single point. Scraper lips prevent particles from accumulating. Beaded lips yield an even thicker film than chamfered lips, advantageous for rapid reciprocating applications. More information is available on **Page 2-16**.

Parker Hannifin Corporation
EPS Division
Tel: (801) 972-3000
Fax: (801) 973-4019

Common Materials Used in this Product

The most popular PTFE fillers used for FlexiSeal rod & piston products are carbon fiber, fiberglass, aromatic polyester and graphite. Virgin PTFE is also popular for these products when conditions are mild.

A number of other fillers are used in combination with PTFE. Non-PTFE compounds are also available. More information on these materials and their properties is available in **Tab 3**. For best results consult the EPS Division PTFE Application Engineering team at (801) 972-3000.

0502 — Carbon Fiber Filled

Carbon fiber lowers creep, increases flex and compressive modulus and raises hardness. Coefficient of thermal expansion is lowered and thermal conductivity is higher for compounds of carbon fiber filled PTFE. Ideal for automotive applications in shock absorbers and water pumps.

0203 — Fiberglass Filled

Glass fiber has a positive impact on creep performance of PTFE. It also adds wear resistance and offers good compression strength.

0601 — Aromatic Polyester Filled

Aromatic polyester is excellent for high temperatures and has excellent wear resistance against soft, dynamic surfaces. Not recommended for sealing applications involving steam.

0301 — Graphite Filled

Since graphite is often used as a lubricant, it does not significantly increase the coefficient of friction of PTFE when used as a filler. The low friction allows the compound to be used when both shaft speed and pressure are high. Graphite also is chemically inert which enables its use in corrosive medias.

Parker Hannifin Corporation
EPS Division
Tel: (801) 972-3000
Fax: (801) 973-4019

There are two decision trees in this section. The first one deals with static and slow reciprocating applications where the seals are being squeezed radially between their ID and OD. Face seals, which are usually static or slow rotary, are covered on **Page 6-4**. The second decision tree on **Page 5-5** deals with radial seals that experience regular dynamic motion.

The key application considerations for static & intermittent dynamic rod & piston FlexiSeals are gland configuration and pressure. Pressures above 3000 psi call for the extended heel option, which is further explained on **Page 5-10**.

The key application considerations for dynamic reciprocating applications are pressure, media abrasiveness, friction requirements, and gland configuration.

The decision trees in this guide are to be used as an engineering guide only. Often several other parameters must be considered to optimize seal design. Contact Parker's PTFE Engineering Team for confirmation of your choice or further recommendations. Parker also recommends that any seal be tested in the application conditions before releasing for production.

Decision Trees

Static & Intermittent Dynamic Rod & Piston Applications

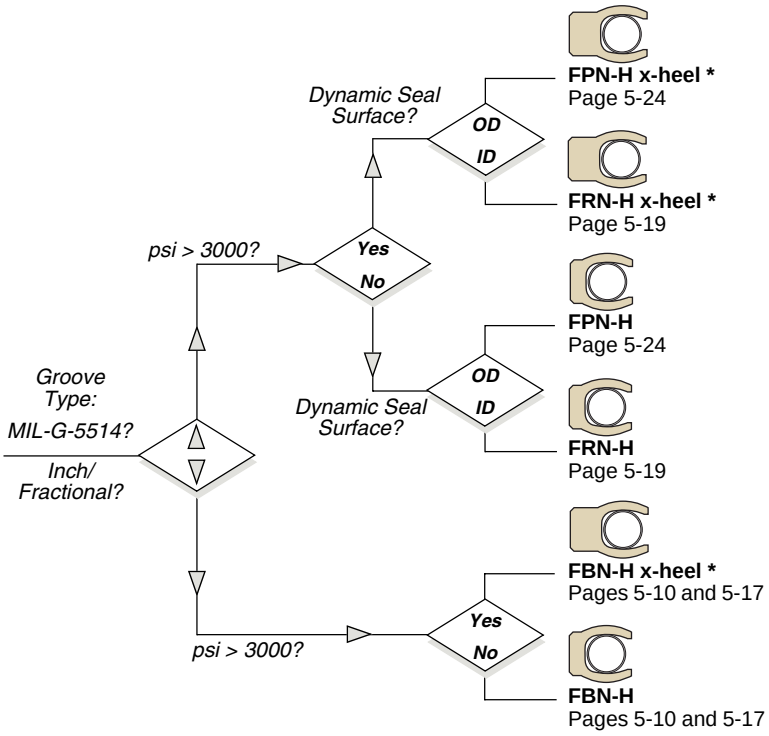

* See Extended Heel Options on **Page 5-10**.

Parker Hannifin Corporation
EPS Division
Tel: (801) 972-3000
Fax: (801) 973-4019

Dynamic Reciprocating Applications

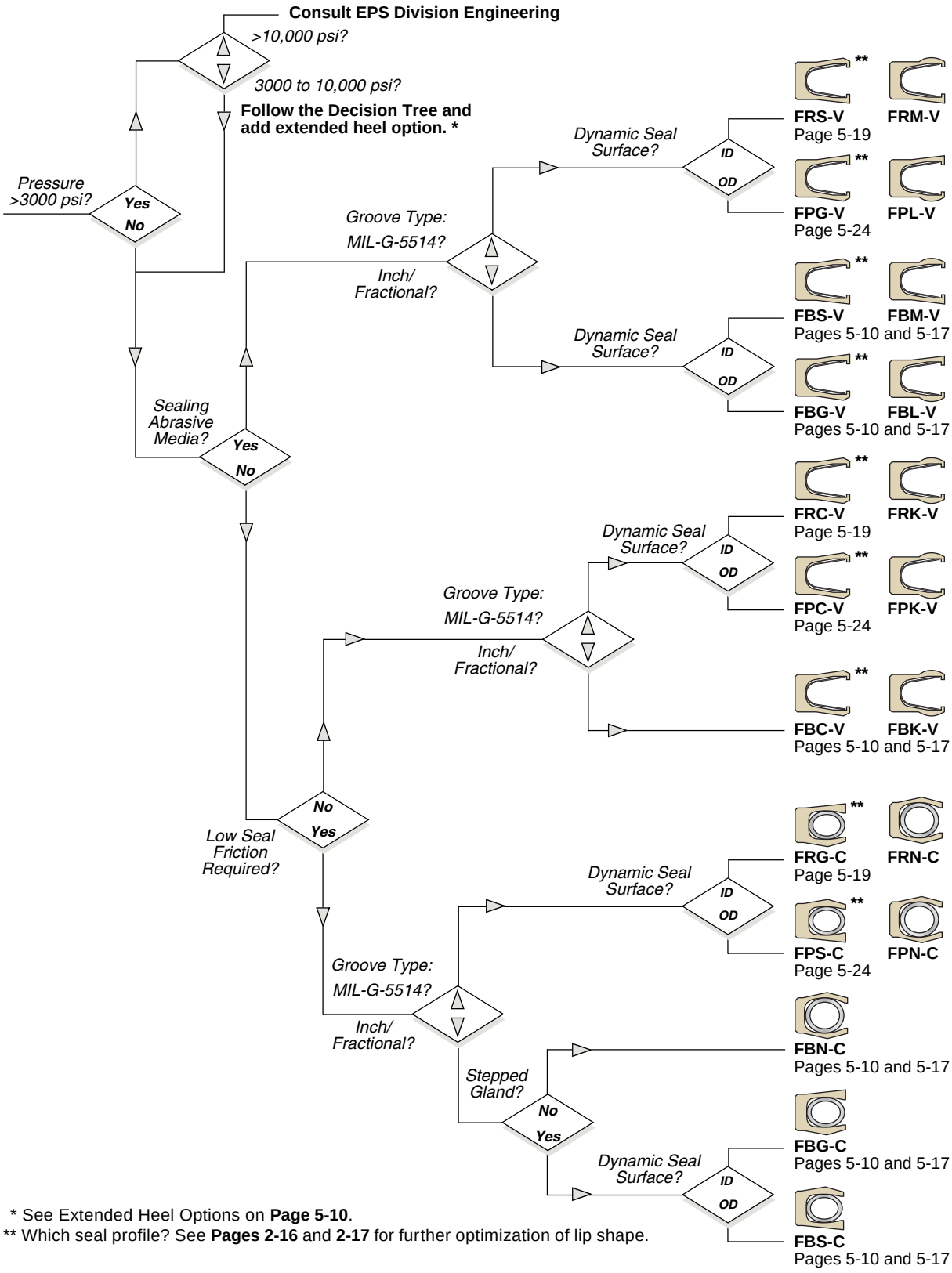

* See Extended Heel Options on **Page 5-10**.
** Which seal profile? See **Pages 2-16** and **2-17** for further optimization of lip shape.

01/15/06

Parker Hannifin Corporation
EPS Division
Tel: (801) 972-3000
Fax: (801) 973-4019

Part Number Nomenclature — FlexiSeal Rod & Piston

Table 5-2. FlexiSeal Rod & Piston Part Number Nomenclature

English

0	5	0	2	FB	S	1	2	5	0	0	5	0	0	1	7	0	S	C	L

4-Digit Material Code
Examples:
0502 = Carbon Fiber Filled PTFE
0203 = Fiberglass Filled PTFE

FlexiSeal
Gland Type Classification
FB = Inch/Fractional or Metric Rod & Piston

Lip Style Designation
N = Default Lip Style
C = Chamfered ID & OD
S = Scraper ID
G = Scraper OD
D = Dual Scraper
K = Beaded ID & OD
L = Beaded ID & Scraper OD
M = Scraper ID & Beaded OD

Gland Cross-Section
Examples:
062 = 0.062"
093 = 0.093"
125 = 0.125"
187 = 0.187"
250 = 0.250"

Gland Inside Diameter
(Rod or Groove Diameter)
Examples:
00500 = 0.500"
02500 = 2.500"
11000 = 11.000"

Seal Height Designation
Examples:
083 = 0.083"
130 = 0.130"
170 = 0.170"
260 = 0.260"
355 = 0.355"

Spring Material
E = ELGILOY
S = Stainless Steel
H = C-276 alloy

Spring Design
V = Cantilever
C = Canted-Coil Spring
H = Helical Spring
W = White silicone filled Cantilever
R = Red silicone filled Cantilever

Spring Load
Blank = No Option (Helical Only)
L = Light
M = Medium
H = Heavy

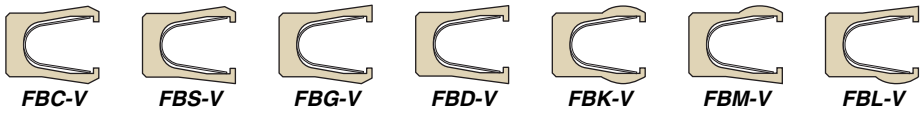

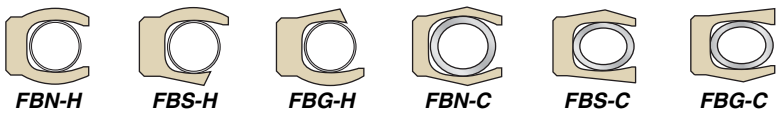

02/15/08

Parker Hannifin Corporation
EPS Division
Tel: (801) 972-3000
Fax: (801) 973-4019

Table 5-2. FlexiSeal Rod & Piston Part Number Nomenclature (Continued)

Metric

M	5	0	2	FB	S	0	5	0	0	0	1	9	0	0	0	6	6	S	C	L

4-Digit Material Code
Examples:
M502 = Carbon Fiber Filled PTFE
M301 = Graphite Filled PTFE
("M" indicates metric)

FlexiSeal
Gland Type Classification
FB = Inch/Fractional or Metric Rod & Piston

Lip Style Designation
N = Default Lip Style
C = Chamfered ID & OD
S = Scraper ID
G = Scraper OD
D = Dual Scraper
K = Beaded ID & OD
L = Beaded ID & Scraper OD
M = Scraper ID & Beaded OD

Gland Cross-Section
Examples:
0200 = 2.00 mm
0250 = 2.50 mm
0400 = 4.00 mm
0500 = 5.00 mm
0700 = 7.00 mm

Gland Inside Diameter
(Rod or Groove Diameter)
Examples:
00800 = 8.00 mm
01150 = 11.50 mm
06500 = 65.00 mm

Seal Height Designation
Examples:
021 = 2.1 mm
033 = 3.3 mm
043 = 4.3 mm
066 = 6.6 mm
090 = 9.0 mm

Spring Material
E = ELGILOY
S = Stainless Steel
H = C-276 alloy

Spring Design
V = Cantilever
C = Canted-Coil Spring
H = Helical Spring
W = White silicone filled Cantilever
R = Red silicone filled Cantilever

Spring Load
Blank = No Option (Helical Only)
L = Light
M = Medium
H = Heavy

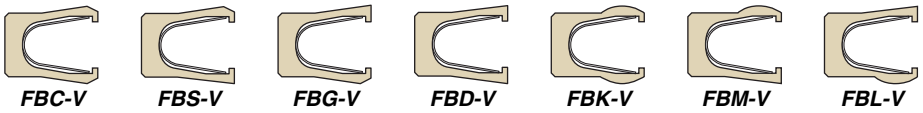

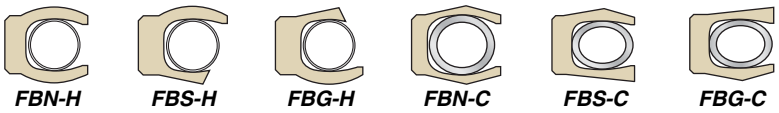

01/15/06

Parker Hannifin Corporation
EPS Division
Tel: (801) 972-3000
Fax: (801) 973-4019

Profiles

Table 5-3. Product Profiles

Profile	Features	Recommended Applications	Available as Standard in High Pressure Extended Heel (up to 10,000 psi)	Friction	Low Pressure Sealability	Good in Abrasive Media	Gland Dimension Table Location	Available in Mil-G-5514 Glands
FBC-V, FPC-V, FRC-V	Chamfered ID & OD, Cantilever Spring	Maximum sealability on ID & OD.	Yes	Medium	Very Good	No	FBC-V — **Pages 5-10, 5-17** FRC-V — **Page 5-19** FPC-V — **Page 5-24**	Yes
FBS-V, FPS-V, FRS-V	Scraper ID, Chamfered OD, Cantilever Spring	Scrapes contamination from rod surface.	Yes	Medium	Very Good	Yes	FBS-V — **Pages 5-10, 5-17** FRS-V — **Page 5-19** FPS-V — **Page 5-24**	Yes
FBG-V, FPG-V, FRG-V	Scraper OD, Chamfered ID, Cantilever Spring	Scrapes contamination from bore surface.	Yes	Medium	Very Good	Yes	FBG-V — **Pages 5-10, 5-17** FRG-V — **Page 5-19** FPG-V — **Page 5-24**	Yes
FBD-V, FPD-V, FRD-V	Scraper ID & OD, Cantilever Spring	Best overall in contaminated media.	Yes	Medium	Very Good	Yes	FBD-V — **Pages 5-10, 5-17** FRD-V — **Page 5-19** FPD-V — **Page 5-24**	Yes
FBK-V, FPK-V, FRK-V	Beaded ID & OD, Cantilever Spring	Beaded lip similar to O-ring contact area.	Yes	Medium	Very Good	No	FBK-V — **Pages 5-10, 5-17** FRK-V — **Page 5-19** FPK-V — **Page 5-24**	Yes
FBM-V, FPM-V, FRM-V	Scraper ID, Beaded OD, Cantilever Spring	Scrapes contamination from rod surface.	Yes	Medium	Very Good	Yes	FBM-V — **Pages 5-10, 5-17** FRM-V — **Page 5-19** FPM-V — **Page 5-24**	Yes
FBL-V, FPL-V, FRL-V	Scraper OD, Beaded ID, Cantilever Spring	Scrapes contamination from bore surface.	Yes	Medium	Very Good	Yes	FBL-V — **Pages 5-10, 5-17** FRL-V — **Page 5-19** FPL-V — **Page 5-24**	Yes

01/15/06

Parker Hannifin Corporation
EPS Division
Tel: (801) 972-3000
Fax: (801) 973-4019

Table 5-3. Product Profiles (Continued)

Profile	Features	Recommended Applications	Available as Standard in High Pressure Extended Heel (up to 10,000 psi)	Friction	Low Pressure Sealability	Good in Abrasive Media	Gland Dimension Table Location	Available in Mil-G-5514 Glands
FBN-H, FPN-H, FRN-H	Rounded ID & OD, Helical Spring	High radial load increases sealability and friction.	Yes	High	Excellent	No	FBN-H — **Pages 5-10, 5-17** FRN-H — **Page 5-19** FPN-H — **Page 5-24**	Yes
FBS-H, FRS-H	Scraper ID, Rounded OD, Helical Spring	Scrapes contamination from rod surface.	Yes	High	Excellent	Yes	FBS-H — **Pages 5-10, 5-17** FRS-H — **Page 5-19**	Yes
FBG-H, FPG-H	Scraper OD, Rounded ID, Helical Spring	Scrapes contamination from bore surface.	Yes	High	Excellent	Yes	FBG-H — **Pages 5-10, 5-17** FPG-H — **Page 5-24**	Yes
FBN-C, FPN-C, FRN-C 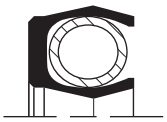	Back-beveled ID & OD, Canted-Coil Spring	Low radial load decreases friction and sealability.	Yes	Low	Good	No	FBN-C — **Pages 5-10, 5-17** FRN-C — **Page 5-19** FPN-C — **Page 5-24**	Yes
FBS-C, FPS-C 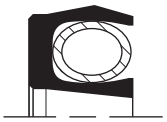	Scraper ID, Chamfered OD, Canted-Coil Spring	Easily snaps into a stepped gland for a piston seal.	Yes	Low	Good	No	FBS-C — **Pages 5-10, 5-17** FPS-C — **Page 5-24**	Yes
FBG-C, FRG-C 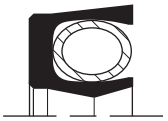	Scraper OD, Chamfered ID, Canted-Coil Spring	Easily snaps into a stepped gland for a rod seal.	Yes	Low	Good	No	FBG-C — **Pages 5-10, 5-17** FRG-C — **Page 5-19**	Yes

01/15/06

Parker Hannifin Corporation
EPS Division
Tel: (801) 972-3000
Fax: (801) 973-4019
www.parker.com/eps

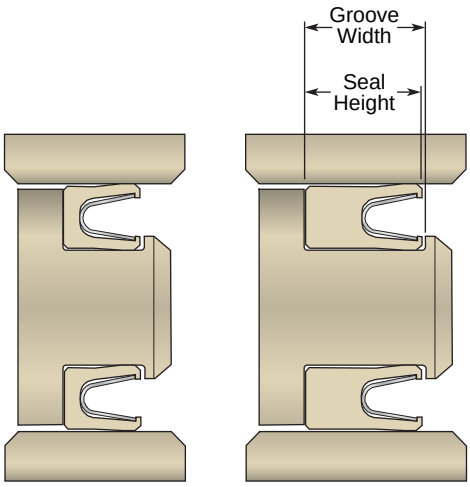

Standard Heel *Extended Heel*

Table 5-4. Seal Height Callouts

Radial Cross-Section	Standard Heel Callout	Extended Heel Callout
062	083	140
093	130	173
125	170	220
187	260	310
250	355	450

FB Profiles

All of these FB profiles will fit into the Industrial Inch/Fractional gland tables on the following pages. Metric part numbers begin with an “M” and appear on **Page 5-17**.

Design Considerations

- Hardware Configurations/Installation, see **Page 2-3**
- Surface Finish and Hardness, see **Page 2-9**
- Extrusion Gaps and High Pressure, see **Page 2-10**
- Spring Choices, see **Page 2-12**
- Lip Shapes, see **Page 2-16**
- Shaft Misalignment Issues, see **Page 2-19**

Part Number Example

Table 5-5. FB Inch/Fractional Part Number

0 5 0 2 **FB C** 1 2 5 0 0 5 0 0 1 7 0 S **V** M

Inch/Fractional Rod & Piston
Chamfered ID & OD Lip

Cantilever Spring

Extended Heel Option

All part numbers on the following pages call for the standard seal height for pressures below 3000 psi.

The heel of a FlexiSeal can be extended to increase extrusion resistance simply by changing the seal height callout in the part number.

0 5 0 2 F B C 0 6 2 0 1 1 2 5 **0 8 3** S V M

Seal Height

Just find where the G dimension for the groove width is designated in the gland tables and switch to the longer extended heel callout in the part number.

0 5 0 2 F B C 0 6 2 0 1 1 2 5 **1 4 0** S V M

Seal Height

02/15/08

Parker Hannifin Corporation
EPS Division
Tel: (801) 972-3000
Fax: (801) 973-4019
www.parker.com/eps

Gland Dimensions — FB Profiles

Table 5-6. FB Inch/Fractional Gland Dimensions

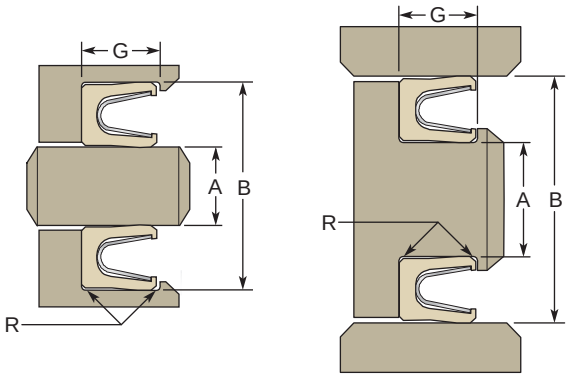

Rod Seal *Piston Seal*

Each of these FlexiSeal profiles were designed to fit into either the Inch/Fractional glands on the following pages or the Metric glands on **Page 5-17**.

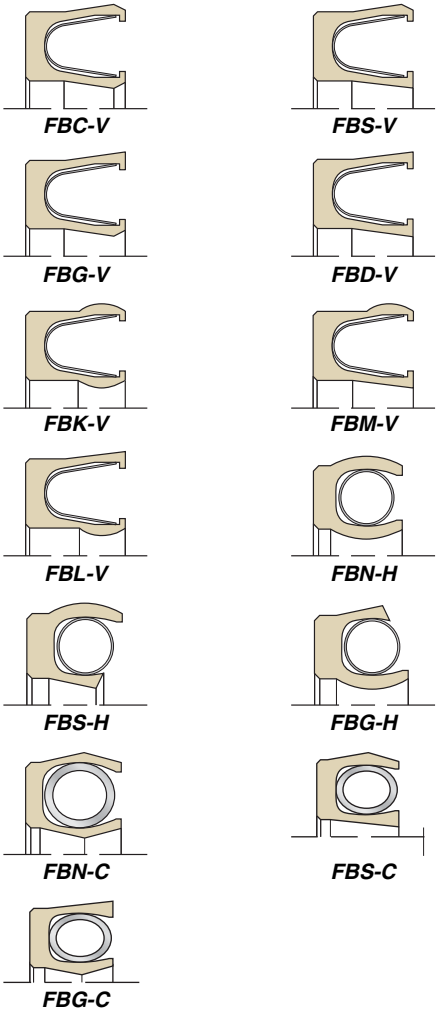

Dash #	A Rod or Groove Diameter	B Bore or Groove Diameter	Part Number

R = 0.007" max. radius

G for Standard heel groove = 0.094/0.104" (083 callout)
G for Extended heel groove = 0.149/0.159" (140 callout)

	+.000/ -.001	+.001/ -.000	
-006	0.125	0.250	**xxxxFBx06200125083xxx**
-007	0.156	0.281	**xxxxFBx06200156083xxx**
-008	0.187	0.312	**xxxxFBx06200187083xxx**
-009	0.218	0.343	**xxxxFBx06200218083xxx**
-010	0.250	0.375	**xxxxFBx06200250083xxx**
-011	0.312	0.437	**xxxxFBx06200312083xxx**
-012	0.375	0.500	**xxxxFBx06200375083xxx**
-013	0.437	0.562	**xxxxFBx06200437083xxx**
-014	0.500	0.625	**xxxxFBx06200500083xxx**
-015	0.562	0.687	**xxxxFBx06200562083xxx**
-016	0.625	0.750	**xxxxFBx06200625083xxx**
-017	0.687	0.812	**xxxxFBx06200687083xxx**
-018	0.750	0.875	**xxxxFBx06200750083xxx**
-019	0.812	0.937	**xxxxFBx06200812083xxx**
-020	0.875	1.000	**xxxxFBx06200875083xxx**
-021	0.937	1.062	**xxxxFBx06200937083xxx**
-022	1.000	1.125	**xxxxFBx06201000083xxx**
-023	1.062	1.187	**xxxxFBx06201062083xxx**
-024	1.125	1.250	**xxxxFBx06201125083xxx**
-025	1.187	1.312	**xxxxFBx06201187083xxx**
-026	1.250	1.375	**xxxxFBx06201250083xxx**
-027	1.312	1.437	**xxxxFBx06201312083xxx**
-028	1.375	1.500	**xxxxFBx06201375083xxx**
-029	1.500	1.625	**xxxxFBx06201500083xxx**
-030	1.625	1.750	**xxxxFBx06201625083xxx**
-031	1.750	1.875	**xxxxFBx06201750083xxx**
-032	1.875	2.000	**xxxxFBx06201875083xxx**
-033	2.000	2.125	**xxxxFBx06202000083xxx**
-034	2.125	2.250	**xxxxFBx06202125083xxx**

02/15/08

Parker Hannifin Corporation
EPS Division
Tel: (801) 972-3000
Fax: (801) 973-4019

Table 5-6. FB Inch/Fractional Gland Dimensions (Continued)

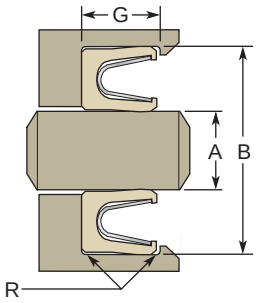

Rod Seal

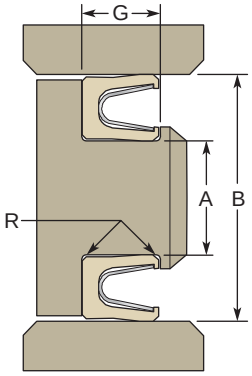

Piston Seal

Dash #	A Rod or Groove Diameter	B Bore or Groove Diameter	Part Number

R = 0.007" max. radius

G for Standard heel groove = 0.094/0.104" (083 callout)
G for Extended heel groove = 0.149/0.159" (140 callout)

	+.000/ -.001	+.001/ -.000	
-035	2.250	2.375	**xxxxFBx06202250083xxx**
-036	2.375	2.500	**xxxxFBx06202375083xxx**
-037	2.500	2.625	**xxxxFBx06202500083xxx**
-038	2.625	2.750	**xxxxFBx06202625083xxx**
-039	2.750	2.875	**xxxxFBx06202750083xxx**
-040	2.875	3.000	**xxxxFBx06202875083xxx**
-041	3.000	3.125	**xxxxFBx06203000083xxx**
-042	3.250	3.375	**xxxxFBx06203250083xxx**
-043	3.500	3.625	**xxxxFBx06203500083xxx**
-044	3.750	3.875	**xxxxFBx06203750083xxx**
-045	4.000	4.125	**xxxxFBx06204000083xxx**

R = 0.010" max. radius

G for Standard heel groove = 0.141/0.151" (130 callout)
G for Extended heel groove = 0.183/0.193" (173 callout)

	+.000/ -.002	+.002/ -.000	
-106	0.187	0.375	**xxxxFBx09300187130xxx**
-107	0.219	0.406	**xxxxFBx09300219130xxx**
-108	0.250	0.437	**xxxxFBx09300250130xxx**
-109	0.312	0.500	**xxxxFBx09300312130xxx**
-110	0.375	0.562	**xxxxFBx09300375130xxx**
-111	0.437	0.625	**xxxxFBx09300437130xxx**
-112	0.500	0.687	**xxxxFBx09300500130xxx**
-113	0.562	0.750	**xxxxFBx09300562130xxx**
-114	0.625	0.812	**xxxxFBx09300625130xxx**
-115	0.687	0.875	**xxxxFBx09300687130xxx**
-116	0.750	0.937	**xxxxFBx09300750130xxx**
-117	0.812	1.000	**xxxxFBx09300812130xxx**
-118	0.875	1.062	**xxxxFBx09300875130xxx**
-119	0.937	1.125	**xxxxFBx09300937130xxx**
-120	1.000	1.187	**xxxxFBx09301000130xxx**
-121	1.062	1.250	**xxxxFBx09301062130xxx**

Dash #	A Rod or Groove Diameter	B Bore or Groove Diameter	Part Number
-122	1.125	1.312	**xxxxFBx09301125130xxx**
-123	1.187	1.375	**xxxxFBx09301187130xxx**
-124	1.250	1.437	**xxxxFBx09301250130xxx**
-125	1.312	1.500	**xxxxFBx09301312130xxx**
-126	1.375	1.562	**xxxxFBx09301375130xxx**
-127	1.437	1.625	**xxxxFBx09301437130xxx**
-128	1.500	1.687	**xxxxFBx09301500130xxx**
-129	1.562	1.750	**xxxxFBx09301562130xxx**
-130	1.625	1.812	**xxxxFBx09301625130xxx**
-131	1.687	1.875	**xxxxFBx09301687130xxx**
-132	1.750	1.937	**xxxxFBx09301750130xxx**
-133	1.812	2.000	**xxxxFBx09301812130xxx**
-134	1.875	2.062	**xxxxFBx09301875130xxx**
-135	1.937	2.125	**xxxxFBx09301937130xxx**
-136	2.000	2.187	**xxxxFBx09302000130xxx**
-137	2.062	2.250	**xxxxFBx09302062130xxx**
-138	2.125	2.312	**xxxxFBx09302125130xxx**
-139	2.187	2.375	**xxxxFBx09302187130xxx**
-140	2.250	2.437	**xxxxFBx09302250130xxx**
-141	2.312	2.500	**xxxxFBx09302312130xxx**
-142	2.375	2.562	**xxxxFBx09302375130xxx**
-143	2.437	2.625	**xxxxFBx09302437130xxx**
-144	2.500	2.687	**xxxxFBx09302500130xxx**
-145	2.562	2.750	**xxxxFBx09302562130xxx**
-146	2.625	2.812	**xxxxFBx09302625130xxx**
-147	2.687	2.875	**xxxxFBx09302687130xxx**
-148	2.750	2.937	**xxxxFBx09302750130xxx**
-149	2.812	3.000	**xxxxFBx09302812130xxx**
-150	2.875	3.062	**xxxxFBx09302875130xxx**
-151	3.000	3.187	**xxxxFBx09303000130xxx**
-152	3.250	3.437	**xxxxFBx09303250130xxx**
-153	3.500	3.687	**xxxxFBx09303500130xxx**
-154	3.750	3.937	**xxxxFBx09303750130xxx**
-155	4.000	4.187	**xxxxFBx09304000130xxx**
-156	4.250	4.437	**xxxxFBx09304250130xxx**
-157	4.500	4.687	**xxxxFBx09304500130xxx**

02/15/08

Parker Hannifin Corporation
EPS Division
Tel: (801) 972-3000
Fax: (801) 973-4019

Table 5-6. FB Inch/Fractional Gland Dimensions (Continued)

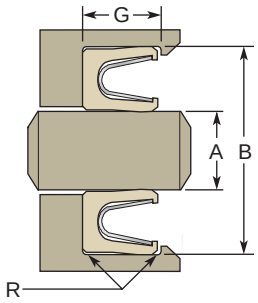

Rod Seal

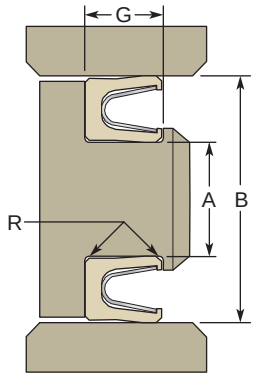

Piston Seal

Dash #	A Rod or Groove Diameter	B Bore or Groove Diameter	Part Number

R = 0.010" max. radius

G for Standard heel groove = 0.141/0.151" (130 callout)
G for Extended heel groove = 0.183/0.193" (173 callout)

	+.000/ -.002	+.002/ -.000	
-158	4.750	4.937	**xxxxFBx09304750130xxx**
-159	5.000	5.187	**xxxxFBx09305000130xxx**
-160	5.250	5.437	**xxxxFBx09305250130xxx**
-161	5.500	5.687	**xxxxFBx09305500130xxx**
-162	5.750	5.928	**xxxxFBx09305750130xxx**
-163	6.000	6.187	**xxxxFBx09306000130xxx**

R = 0.010" max. radius

G for Standard heel groove = 0.188/0.198" (170 callout)
G for Extended heel groove = 0.235/0.245" (220 callout)

	+.000/ -.002	+.002/ -.000	
-202	0.250	0.500	**xxxxFBx12500250170xxx**
-203	0.312	0.562	**xxxxFBx12500312170xxx**
-204	0.375	0.625	**xxxxFBx12500375170xxx**
-205	0.437	0.687	**xxxxFBx12500437170xxx**
-206	0.500	0.750	**xxxxFBx12500500170xxx**
-207	0.562	0.812	**xxxxFBx12500562170xxx**
-208	0.625	0.875	**xxxxFBx12500625170xxx**
-209	0.687	0.937	**xxxxFBx12500687170xxx**
-210	0.750	1.000	**xxxxFBx12500750170xxx**
-211	0.812	1.062	**xxxxFBx12500812170xxx**
-212	0.875	1.125	**xxxxFBx12500875170xxx**
-213	0.937	1.187	**xxxxFBx12500937170xxx**
-214	1.000	1.250	**xxxxFBx12501000170xxx**
-215	1.062	1.312	**xxxxFBx12501062170xxx**
-216	1.125	1.375	**xxxxFBx12501125170xxx**
-217	1.187	1.437	**xxxxFBx12501187170xxx**
-218	1.250	1.500	**xxxxFBx12501250170xxx**
-219	1.312	1.562	**xxxxFBx12501312170xxx**
-220	1.375	1.625	**xxxxFBx12501375170xxx**
-221	1.437	1.687	**xxxxFBx12501437170xxx**

Dash #	A Rod or Groove Diameter	B Bore or Groove Diameter	Part Number
-222	1.500	1.750	**xxxxFBx12501500170xxx**
-223	1.625	1.875	**xxxxFBx12501625170xxx**
-224	1.750	2.000	**xxxxFBx12501750170xxx**
-225	1.875	2.125	**xxxxFBx12501875170xxx**
-226	2.000	2.250	**xxxxFBx12502000170xxx**
-227	2.125	2.375	**xxxxFBx12502125170xxx**
-228	2.250	2.500	**xxxxFBx12502250170xxx**
-229	2.375	2.625	**xxxxFBx12502375170xxx**
-230	2.500	2.750	**xxxxFBx12502500170xxx**
-231	2.625	2.875	**xxxxFBx12502625170xxx**
-232	2.750	3.000	**xxxxFBx12502750170xxx**
-233	2.875	3.125	**xxxxFBx12502875170xxx**
-234	3.000	3.250	**xxxxFBx12503000170xxx**
-235	3.125	3.375	**xxxxFBx12503125170xxx**
-236	3.250	3.500	**xxxxFBx12503250170xxx**
-237	3.375	3.625	**xxxxFBx12503375170xxx**
-238	3.500	3.750	**xxxxFBx12503500170xxx**
-239	3.625	3.875	**xxxxFBx12503625170xxx**
-240	3.750	4.000	**xxxxFBx12503750170xxx**
-241	3.875	4.125	**xxxxFBx12503875170xxx**
-242	4.000	4.250	**xxxxFBx12504000170xxx**
-243	4.125	4.375	**xxxxFBx12504125170xxx**
-244	4.250	4.500	**xxxxFBx12504250170xxx**
-245	4.375	4.625	**xxxxFBx12504375170xxx**
-246	4.500	4.750	**xxxxFBx12504500170xxx**
-247	4.625	4.875	**xxxxFBx12504625170xxx**
-248	4.750	5.000	**xxxxFBx12504750170xxx**
-249	4.875	5.125	**xxxxFBx12504875170xxx**
-250	5.000	5.250	**xxxxFBx12505000170xxx**
-251	5.125	5.375	**xxxxFBx12505125170xxx**
-252	5.250	5.500	**xxxxFBx12505250170xxx**
-253	5.375	5.625	**xxxxFBx12505375170xxx**
-254	5.500	5.750	**xxxxFBx12505500170xxx**
-255	5.625	5.875	**xxxxFBx12505625170xxx**
-256	5.750	6.000	**xxxxFBx12505750170xxx**
-257	5.875	6.125	**xxxxFBx12505875170xxx**

02/15/08
rev.08/2021

Parker Hannifin Corporation
EPS Division
Tel: (801) 972-3000
Fax: (801) 973-4019
www.parker.com/eps

Table 5-6. FB Inch/Fractional Gland Dimensions (Continued)

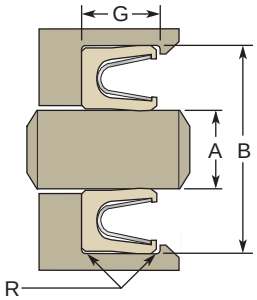

Rod Seal

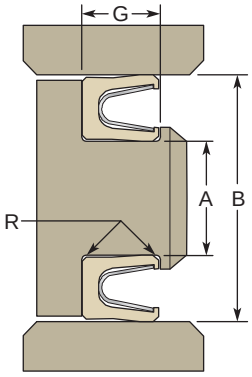

Piston Seal

Dash #	A Rod or Groove Diameter	B Bore or Groove Diameter	Part Number

R = 0.010" max. radius

G for Standard heel groove = 0.188/0.198" (170 callout)
G for Extended heel groove = 0.235/0.245" (220 callout)

	+.000/ -.002	+.002/ -.000	
-258	6.000	6.250	**xxxxFBx12506000170xxx**
-259	6.250	6.500	**xxxxFBx12506250170xxx**
-260	6.500	6.750	**xxxxFBx12506500170xxx**
-261	6.750	7.000	**xxxxFBx12506750170xxx**
-262	7.000	7.250	**xxxxFBx12507000170xxx**
-263	7.250	7.500	**xxxxFBx12507250170xxx**
-264	7.500	7.750	**xxxxFBx12507500170xxx**
-265	7.750	8.000	**xxxxFBx12507750170xxx**
-266	8.000	8.250	**xxxxFBx12508000170xxx**
-267	8.250	8.500	**xxxxFBx12508250170xxx**
-268	8.500	8.750	**xxxxFBx12508500170xxx**
-269	8.750	9.000	**xxxxFBx12508750170xxx**
-270	9.000	9.250	**xxxxFBx12509000170xxx**
-271	9.250	9.500	**xxxxFBx12509250170xxx**
-272	9.500	9.750	**xxxxFBx12509500170xxx**
-273	9.750	10.000	**xxxxFBx12509750170xxx**
-274	10.000	10.250	**xxxxFBx12510000170xxx**
-275	10.500	10.750	**xxxxFBx12510500170xxx**
-276	11.000	11.250	**xxxxFBx12511000170xxx**
-277	11.500	11.750	**xxxxFBx12511500170xxx**
-278	12.000	12.250	**xxxxFBx12512000170xxx**
-279	12.500	12.750	**xxxxFBx12512500170xxx**
-280	13.000	13.250	**xxxxFBx12513000170xxx**
-281	13.500	13.750	**xxxxFBx12513500170xxx**

R = 0.015" max. radius

G for Standard heel groove = 0.281/0.291" (260 callout)
G for Extended heel groove = 0.334/0.344" (310 callout)

	+.000/ -.002	+.002/ -.000	
-310	0.500	0.875	**xxxxFBx18700500260xxx**
-311	0.562	0.937	**xxxxFBx18700562260xxx**
-312	0.625	1.000	**xxxxFBx18700625260xxx**
-313	0.687	1.062	**xxxxFBx18700687260xxx**

Dash #	A Rod or Groove Diameter	B Bore or Groove Diameter	Part Number
-314	0.750	1.125	**xxxxFBx18700750260xxx**
-315	0.812	1.187	**xxxxFBx18700812260xxx**
-316	0.875	1.250	**xxxxFBx18700875260xxx**
-317	0.937	1.312	**xxxxFBx18700937260xxx**
-318	1.000	1.375	**xxxxFBx18701000260xxx**
-319	1.062	1.437	**xxxxFBx18701062260xxx**
-320	1.125	1.500	**xxxxFBx18701125260xxx**
-321	1.187	1.562	**xxxxFBx18701187260xxx**
-322	1.250	1.625	**xxxxFBx18701250260xxx**
-323	1.312	1.687	**xxxxFBx18701312260xxx**
-324	1.375	1.750	**xxxxFBx18701375260xxx**
-325	1.500	1.875	**xxxxFBx18701500260xxx**
-326	1.625	2.000	**xxxxFBx18701625260xxx**
-327	1.750	2.125	**xxxxFBx18701750260xxx**
-328	1.875	2.250	**xxxxFBx18701875260xxx**
-329	2.000	2.375	**xxxxFBx18702000260xxx**
-330	2.125	2.500	**xxxxFBx18702125260xxx**
-331	2.250	2.625	**xxxxFBx18702250260xxx**
-332	2.375	2.750	**xxxxFBx18702375260xxx**
-333	2.500	2.875	**xxxxFBx18702500260xxx**
-334	2.625	3.000	**xxxxFBx18702625260xxx**
-335	2.750	3.125	**xxxxFBx18702750260xxx**
-336	2.875	3.250	**xxxxFBx18702875260xxx**
-337	3.000	3.375	**xxxxFBx18703000260xxx**
-338	3.125	3.500	**xxxxFBx18703125260xxx**
-339	3.250	3.625	**xxxxFBx18703250260xxx**
-340	3.375	3.750	**xxxxFBx18703375260xxx**
-341	3.500	3.875	**xxxxFBx18703500260xxx**
-342	3.625	4.000	**xxxxFBx18703625260xxx**
-343	3.750	4.125	**xxxxFBx18703750260xxx**
-344	3.875	4.250	**xxxxFBx18703875260xxx**
-345	4.000	4.375	**xxxxFBx18704000260xxx**
-346	4.125	4.500	**xxxxFBx18704125260xxx**
-347	4.250	4.625	**xxxxFBx18704250260xxx**
-348	4.375	4.750	**xxxxFBx18704375260xxx**
-349	4.500	4.875	**xxxxFBx18704500260xxx**

02/15/08

Parker Hannifin Corporation
EPS Division
Tel: (801) 972-3000
Fax: (801) 973-4019

Table 5-6. FB Inch/Fractional Gland Dimensions (Continued)

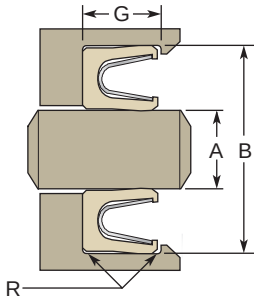

Rod Seal

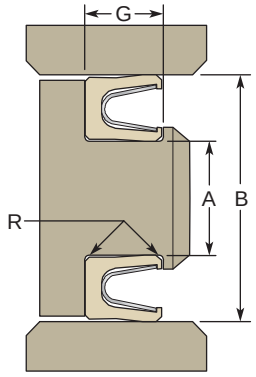

Piston Seal

Dash #	A Rod or Groove Diameter	B Bore or Groove Diameter	Part Number

R = 0.015" max. radius

G for Standard heel groove = 0.281/0.291" (260 callout)
G for Extended heel groove = 0.334/0.344" (310 callout)

	+.000/ -.002	+.002/ -.000	
-350	4.625	5.000	**xxxxFBx18704625260xxx**
-351	4.750	5.125	**xxxxFBx18704750260xxx**
-352	4.875	5.250	**xxxxFBx18704875260xxx**
-353	5.000	5.375	**xxxxFBx18705000260xxx**
-354	5.125	5.500	**xxxxFBx18705125260xxx**
-355	5.250	5.625	**xxxxFBx18705250260xxx**
-356	5.375	5.750	**xxxxFBx18705375260xxx**
-357	5.500	5.875	**xxxxFBx18705500260xxx**
-358	5.625	6.000	**xxxxFBx18705625260xxx**
-359	5.750	6.125	**xxxxFBx18705750260xxx**
-360	5.875	6.250	**xxxxFBx18705875260xxx**
-361	6.000	6.375	**xxxxFBx18706000260xxx**
-362	6.250	6.625	**xxxxFBx18706250260xxx**
-363	6.500	6.875	**xxxxFBx18706500260xxx**
-364	6.750	7.125	**xxxxFBx18706750260xxx**
-365	7.000	7.375	**xxxxFBx18707000260xxx**
-366	7.250	7.625	**xxxxFBx18707250260xxx**
-367	7.500	7.875	**xxxxFBx18707500260xxx**
-368	7.750	8.125	**xxxxFBx18707750260xxx**
-369	8.000	8.375	**xxxxFBx18708000260xxx**
-370	8.250	8.625	**xxxxFBx18708250260xxx**
-371	8.500	8.875	**xxxxFBx18708500260xxx**
-372	8.750	9.125	**xxxxFBx18708750260xxx**
-373	9.000	9.375	**xxxxFBx18709000260xxx**
-374	9.250	9.625	**xxxxFBx18709250260xxx**
-375	9.500	9.875	**xxxxFBx18709500260xxx**
-376	9.750	10.125	**xxxxFBx18709750260xxx**
-377	10.000	10.375	**xxxxFBx18710000260xxx**
-378	10.500	10.875	**xxxxFBx18710500260xxx**
-379	11.000	11.375	**xxxxFBx18711000260xxx**
-380	11.500	11.875	**xxxxFBx18711500260xxx**
-381	12.000	12.375	**xxxxFBx18712000260xxx**

Dash #	A Rod or Groove Diameter	B Bore or Groove Diameter	Part Number
-382	13.000	13.375	**xxxxFBx18713000260xxx**
-383	14.000	14.375	**xxxxFBx18714000260xxx**
-384	15.000	15.375	**xxxxFBx18715000260xxx**
-385	16.000	16.375	**xxxxFBx18716000260xxx**
-386	17.000	17.375	**xxxxFBx18717000260xxx**
-387	18.000	18.375	**xxxxFBx18718000260xxx**
-388	19.000	19.375	**xxxxFBx18719000260xxx**
-389	20.000	20.375	**xxxxFBx18720000260xxx**
-390	21.000	21.375	**xxxxFBx18721000260xxx**
-391	22.000	22.375	**xxxxFBx18722000260xxx**
-392	23.000	23.375	**xxxxFBx18723000260xxx**
-393	24.000	24.375	**xxxxFBx18724000260xxx**
-394	25.000	25.375	**xxxxFBx18725000260xxx**
-395	26.000	26.375	**xxxxFBx18726000260xxx**

R = 0.015" max. radius

G for Standard heel groove = 0.375/0.385" (355 callout)
G for Extended heel groove = 0.475/0.485" (450 callout)

	+.000/ -.003	+.003/ -.000	
-401	1.500	2.000	**xxxxFBx25001500355xxx**
-402	1.625	2.125	**xxxxFBx25001625355xxx**
-403	1.750	2.250	**xxxxFBx25001750355xxx**
-404	1.875	2.375	**xxxxFBx25001875355xxx**
-405	2.000	2.500	**xxxxFBx25002000355xxx**
-406	2.125	2.625	**xxxxFBx25002125355xxx**
-407	2.250	2.750	**xxxxFBx25002250355xxx**
-408	2.375	2.875	**xxxxFBx25002375355xxx**
-409	2.500	3.000	**xxxxFBx25002500355xxx**
-410	2.625	3.125	**xxxxFBx25002625355xxx**
-411	2.750	3.250	**xxxxFBx25002750355xxx**
-412	2.875	3.375	**xxxxFBx25002875355xxx**
-413	3.000	3.500	**xxxxFBx25003000355xxx**
-414	3.125	3.625	**xxxxFBx25003125355xxx**
-415	3.250	3.750	**xxxxFBx25003250355xxx**
-416	3.375	3.875	**xxxxFBx25003375355xxx**

02/15/08

Parker Hannifin Corporation
EPS Division
Tel: (801) 972-3000
Fax: (801) 973-4019

Table 5-6. FB Inch/Fractional Gland Dimensions (Continued)

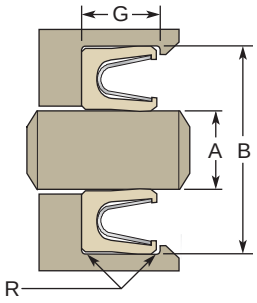

Rod Seal

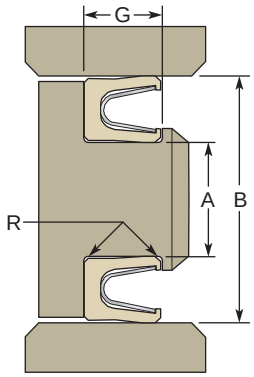

Piston Seal

R = 0.015" max. radius

G for Standard heel groove = 0.375/0.385" (355 callout)
G for Extended heel groove = 0.475/0.485" (450 callout)

Dash #	A Rod or Groove Diameter +.000/ -.003	B Bore or Groove Diameter +.003/ -.000	Part Number
-417	3.500	4.000	**xxxxFBx25003500355xxx**
-418	3.625	4.125	**xxxxFBx25003625355xxx**
-419	3.750	4.250	**xxxxFBx25003750355xxx**
-420	3.875	4.375	**xxxxFBx25003875355xxx**
-421	4.000	4.500	**xxxxFBx25004000355xxx**
-422	4.125	4.625	**xxxxFBx25004125355xxx**
-423	4.250	4.750	**xxxxFBx25004250355xxx**
-424	4.375	4.875	**xxxxFBx25004375355xxx**
-425	4.500	5.000	**xxxxFBx25004500355xxx**
-426	4.625	5.125	**xxxxFBx25004625355xxx**
-427	4.750	5.250	**xxxxFBx25004750355xxx**
-428	4.875	5.375	**xxxxFBx25004875355xxx**
-429	5.000	5.500	**xxxxFBx25005000355xxx**
-430	5.125	5.625	**xxxxFBx25005125355xxx**
-431	5.250	5.750	**xxxxFBx25005250355xxx**
-432	5.375	5.875	**xxxxFBx25005375355xxx**
-433	5.500	6.000	**xxxxFBx25005500355xxx**
-434	5.625	6.125	**xxxxFBx25005625355xxx**
-435	5.750	6.250	**xxxxFBx25005750355xxx**
-436	5.875	6.375	**xxxxFBx25005875355xxx**
-437	6.000	6.500	**xxxxFBx25006000355xxx**
-438	6.250	6.750	**xxxxFBx25006250355xxx**
-439	6.500	7.000	**xxxxFBx25006500355xxx**
-440	6.750	7.250	**xxxxFBx25006750355xxx**
-441	7.000	7.500	**xxxxFBx25007000355xxx**
-442	7.250	7.750	**xxxxFBx25007250355xxx**
-443	7.500	8.000	**xxxxFBx25007500355xxx**
-444	7.750	8.250	**xxxxFBx25007750355xxx**

Dash #	A Rod or Groove Diameter	B Bore or Groove Diameter	Part Number
-445	8.000	8.500	**xxxxFBx25008000355xxx**
-446	8.500	9.000	**xxxxFBx25008500355xxx**
-447	9.000	9.500	**xxxxFBx25009000355xxx**
-448	9.500	10.000	**xxxxFBx25009500355xxx**
-449	10.000	10.500	**xxxxFBx25010000355xxx**
-450	10.500	11.000	**xxxxFBx25010500355xxx**
-451	11.000	11.500	**xxxxFBx25011000355xxx**
-452	11.500	12.000	**xxxxFBx25011500355xxx**
-453	12.000	12.500	**xxxxFBx25012000355xxx**
-454	12.500	13.000	**xxxxFBx25012500355xxx**
-455	13.000	13.500	**xxxxFBx25013000355xxx**
-456	13.500	14.000	**xxxxFBx25013500355xxx**
-457	14.000	14.500	**xxxxFBx25014000355xxx**
-458	14.500	15.000	**xxxxFBx25014500355xxx**
-459	15.000	15.500	**xxxxFBx25015000355xxx**
-460	15.500	16.000	**xxxxFBx25015500355xxx**
-461	16.000	16.500	**xxxxFBx25016000355xxx**
-462	16.500	17.000	**xxxxFBx25016500355xxx**
-463	17.000	17.500	**xxxxFBx25017000355xxx**
-464	17.500	18.000	**xxxxFBx25017500355xxx**
-465	18.000	18.500	**xxxxFBx25018000355xxx**
-466	18.500	19.000	**xxxxFBx25018500355xxx**
-467	19.000	19.500	**xxxxFBx25019000355xxx**
-468	19.500	20.000	**xxxxFBx25019500355xxx**
-469	20.000	20.500	**xxxxFBx25020000355xxx**
-470	21.000	21.500	**xxxxFBx25021000355xxx**
-471	22.000	22.500	**xxxxFBx25022000355xxx**
-472	23.000	23.500	**xxxxFBx25023000355xxx**
-473	24.000	24.500	**xxxxFBx25024000355xxx**
-474	25.000	25.500	**xxxxFBx25025000355xxx**
-475	26.000	26.500	**xxxxFBx25026000355xxx**

Parker Hannifin Corporation
EPS Division
Tel: (801) 972-3000
Fax: (801) 973-4019

Metric FB Profiles

All of these FB profiles will fit into the Metric gland sizes on **Page 5-18**.

Design Considerations

- Hardware Configurations/Installation, see **Page 2-3**
- Surface Finish and Hardness, see **Page 2-9**
- Extrusion Gaps and High Pressure, see **Page 2-10**
- Spring Choices, see **Page 2-12**
- Lip Shapes, see **Page 2-16**
- Shaft Misalignment Issues, see **Page 2-19**

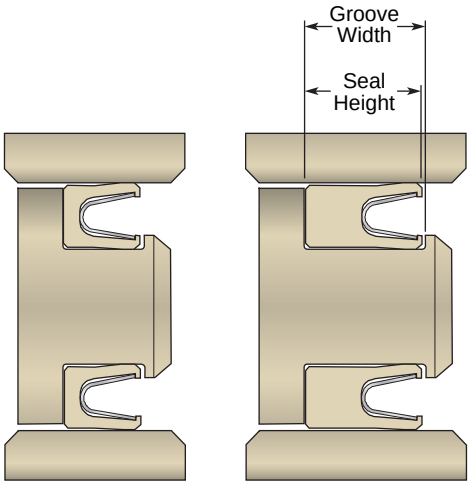

Standard Heel ***Extended Heel***

Table 5-7. Seal Height Callouts

Radial Cross-Section	Standard Heel Callout	Extended Heel Callout
0200	021	036
0250	033	042
0400	043	056
0500	066	079
0700	090	114

Part Number Example

Table 5-8. FB Metric Part Number

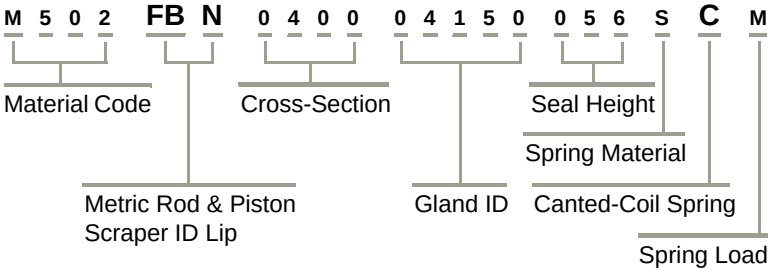

Extended Heel Option

All part numbers on the following page call for the standard seal height for pressures below 3000 psi.

The heel of a FlexiSeal can be extended to increase extrusion resistance simply by changing the seal height callout in the part number.

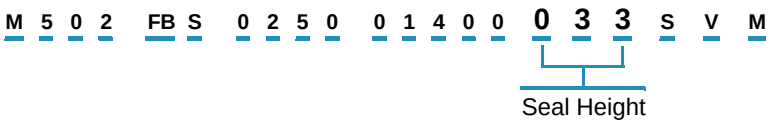

Just find where the G dimension for the groove width is designated in the gland tables and switch to the longer extended heel callout in the part number.

01/15/06

Parker Hannifin Corporation
EPS Division
Tel: (801) 972-3000
Fax: (801) 973-4019

Gland Dimensions — Metric FB Profiles

5

Each of these FlexiSeal profiles were designed to fit into the Metric glands on this page.

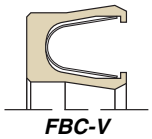
FBC-V

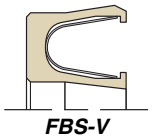
FBS-V

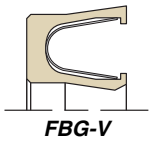
FBG-V

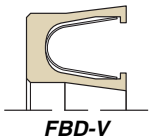
FBD-V

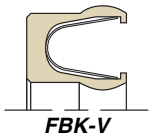
FBK-V

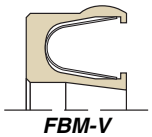
FBM-V

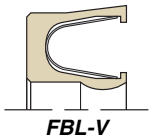
FBL-V

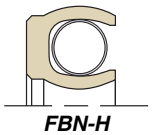
FBN-H

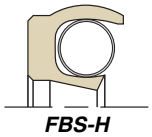
FBS-H

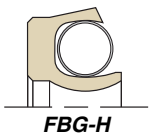
FBG-H

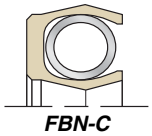
FBN-C

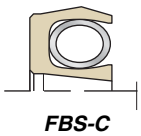
FBS-C

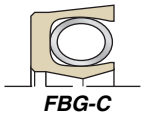
FBG-C

Table 5-9. FB Metric Gland Dimensions

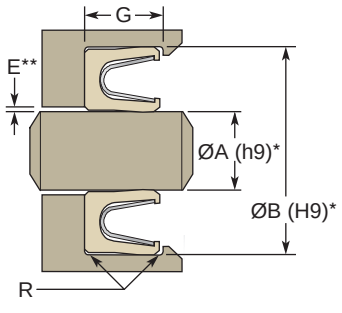

Rod Seal

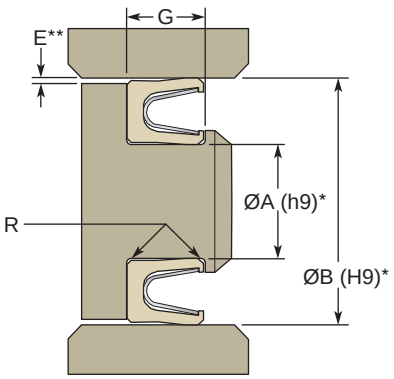

Piston Seal

Cross-Section Callout	Gland Cross-Section	Std. Heel Height Callout	Ext. Heel Height Callout	Std. Heel Groove Width (G) +0.25/ -0.00 mm	Ext. Heel Groove Width (G) +0.25/ -0.00 mm	Max Radius (R)
0200	2.00 mm	021	036	2.39 mm	3.78 mm	0.18 mm
0250	2.50 mm	033	042	3.58 mm	4.65 mm	0.25 mm
0400	4.00 mm	043	056	4.78 mm	5.97 mm	0.25 mm
0500	5.00 mm	066	079	7.14 mm	8.48 mm	0.38 mm
0700	7.00 mm	090	114	9.53 mm	12.07 mm	0.38 mm

* For ISO Tolerances see **Appendix D**.
** See **Page 2-10** for more on extrusion gap.

Example Part Numbers

Part Number	Hardware ID (A) in mm	Hardware OD (B) in mm	Groove Width (G) in mm
FBS-V Profile			
M502FBS025001150042SVM	11.50 +.00/-.04	16.50 +.04/-.00	4.65 +0.25/-.00
FBN-C Profile			
M100FBN050015000066HCL	150.00 +.00/-.10	160.00 +.10/-.00	7.14 +0.25/-.00

02/15/08

Parker Hannifin Corporation
EPS Division
Tel: (801) 972-3000
Fax: (801) 973-4019

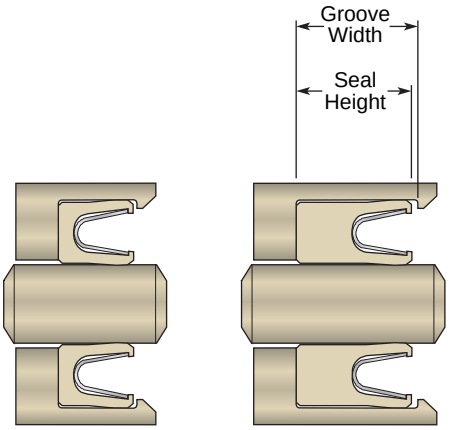

Standard Heel *Extended Heel*

Table 5-10. Seal Height Callouts

Radial Cross-Section	Standard Heel Callout	Extended Heel Callout
062	083	140
093	130	165
125	170	220
187	260	310
250	355	450

FR Profiles

All FR profiles will fit into the MIL-G-5514 rod gland tables on the following page.

Design Considerations

- Hardware Configurations/Installation, see **Page 2-3**
- Surface Finish and Hardness, see **Page 2-9**
- Extrusion Gaps and High Pressure, see **Page 2-10**
- Spring Choices, see **Page 2-12**
- Lip Shapes, see **Page 2-16**
- Shaft Misalignment Issues, see **Page 2-19**

Part Number Example

Table 5-11. FR MIL-G-5514 Rod Part Number

0 5 0 2 **FR C** 1 2 5 0 1 3 1 0 1 7 0 S **V** M

O-Ring Groove — Rod
Chamfered ID & OD Lip

Cantilever Spring

Extended Heel Option

All part numbers on the following pages call for the standard seal height for pressures below 3000 psi.

The heel of a FlexiSeal can be extended to increase extrusion resistance simply by changing the seal height callout in the part number.

0 5 0 2 F R C 0 6 2 0 1 1 2 5 **0 8 3** S V M

Seal Height

Just find where the G dimension for the groove width is designated in the gland tables and switch to the longer extended heel callout in the part number.

0 5 0 2 F R C 0 6 2 0 1 1 2 5 **1 4 0** S V M

Seal Height

01/15/07

Parker Hannifin Corporation
EPS Division
Tel: (801) 972-3000
Fax: (801) 973-4019

Gland Dimensions — FR Profiles

Table 5-12. FR MIL-G-5514 Rod Gland Dimensions

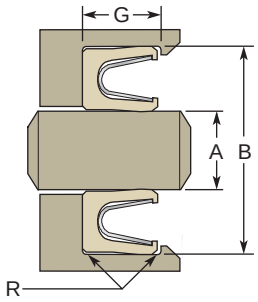

Rod Seal

Each of these FlexiSeal profiles were designed to fit into the MIL-G-5514 rod glands on the following pages.

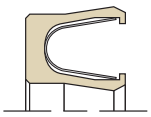

FRC-V

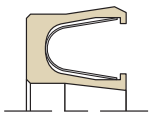

FRS-V

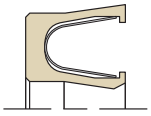

FRG-V

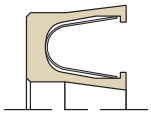

FRD-V

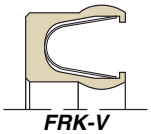

FRK-V

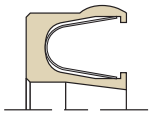

FRM-V

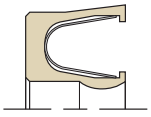

FRL-V

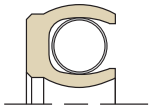

FRN-H

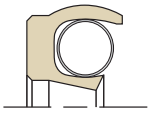

FRS-H

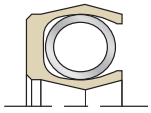

FRN-C

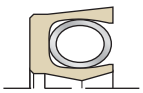

FRG-C

Dash #	A Rod Diameter	B Groove Diameter	Part Number
R = 0.015" max. radius E = 0.002" max. G for Standard heel groove = 0.094/0.104" (083 callout) G for Extended heel groove = 0.149/0.159" (140 callout)			
	+.000/ -.001	**+.001/ -.000**	
-006	0.123	0.235	**xxxxFRx06200123083xxx**
-007	0.154	0.266	**xxxxFRx06200154083xxx**
-008	0.185	0.297	**xxxxFRx06200185083xxx**
-009	0.217	0.329	**xxxxFRx06200217083xxx**
-010	0.248	0.360	**xxxxFRx06200248083xxx**
-011	0.310	0.422	**xxxxFRx06200310083xxx**
-012	0.373	0.485	**xxxxFRx06200373083xxx**
	+.000/ -.002	**+.002/ -.000**	
-013	0.435	0.547	**xxxxFRx06200435083xxx**
-014	0.498	0.610	**xxxxFRx06200498083xxx**
-015	0.560	0.672	**xxxxFRx06200560083xxx**
-016	0.623	0.735	**xxxxFRx06200623083xxx**
-017	0.685	0.797	**xxxxFRx06200685083xxx**
-018	0.748	0.860	**xxxxFRx06200748083xxx**
-019	0.810	0.922	**xxxxFRx06200810083xxx**
-020	0.873	0.985	**xxxxFRx06200873083xxx**
-021	0.935	1.047	**xxxxFRx06200935083xxx**
-022	0.998	1.110	**xxxxFRx06200998083xxx**
-023	1.060	1.172	**xxxxFRx06201060083xxx**
-024	1.123	1.235	**xxxxFRx06201123083xxx**
-025	1.185	1.297	**xxxxFRx06201185083xxx**
-026	1.248	1.360	**xxxxFRx06201248083xxx**
-027	1.310	1.422	**xxxxFRx06201310083xxx**
-028	1.373	1.485	**xxxxFRx06201373083xxx**

Parker Hannifin Corporation
EPS Division
Tel: (801) 972-3000
Fax: (801) 973-4019

Table 5-12. FR MIL-G_5514 Rod Gland Dimensions (Continued)

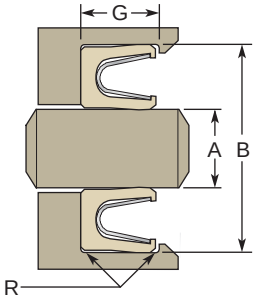

Rod Seal

Dash #	A Rod Diameter	B Groove Diameter	Part Number
R = 0.015" max. radius E = 0.002" max. G for Standard heel groove = 0.141/0.151" (130 callout) G for Extended heel groove = 0.183/0.193" (165 callout)			
	+.000/ -.002	+.002/ -.000	
-110	0.373	0.551	**xxxxFRx09300373130xxx**
-111	0.435	0.613	**xxxxFRx09300435130xxx**
-112	0.498	0.676	**xxxxFRx09300498130xxx**
-113	0.560	0.738	**xxxxFRx09300560130xxx**
-114	0.623	0.801	**xxxxFRx09300623130xxx**
-115	0.685	0.863	**xxxxFRx09300685130xxx**
-116	0.748	0.926	**xxxxFRx09300748130xxx**
-117	0.810	0.988	**xxxxFRx09300810130xxx**
-118	0.873	1.051	**xxxxFRx09300873130xxx**
-119	0.935	1.113	**xxxxFRx09300935130xxx**
-120	0.998	1.176	**xxxxFRx09300998130xxx**
-121	1.060	1.238	**xxxxFRx09301060130xxx**
-122	1.123	1.301	**xxxxFRx09301123130xxx**
-123	1.185	1.363	**xxxxFRx09301185130xxx**
-124	1.248	1.426	**xxxxFRx09301248130xxx**
-125	1.310	1.488	**xxxxFRx09301310130xxx**
-126	1.373	1.551	**xxxxFRx09301373130xxx**
-127	1.435	1.613	**xxxxFRx09301435130xxx**
-128	1.498	1.676	**xxxxFRx09301498130xxx**
-129	1.560	1.738	**xxxxFRx09301560130xxx**
-130	1.623	1.801	**xxxxFRx09301623130xxx**
-131	1.685	1.863	**xxxxFRx09301685130xxx**
-132	1.748	1.926	**xxxxFRx09301748130xxx**
-133	1.810	1.988	**xxxxFRx09301810130xxx**
-134	1.873	2.051	**xxxxFRx09301873130xxx**
-135	1.936	2.114	**xxxxFRx09301936130xxx**
-136	1.998	2.176	**xxxxFRx09301998130xxx**
-137	2.061	2.239	**xxxxFRx09302061130xxx**
-138	2.123	2.301	**xxxxFRx09302123130xxx**
-139	2.186	2.364	**xxxxFRx09302186130xxx**
-140	2.248	2.426	**xxxxFRx09302248130xxx**
-141	2.311	2.489	**xxxxFRx09302311130xxx**
-142	2.373	2.551	**xxxxFRx09302373130xxx**
-143	2.436	2.614	**xxxxFRx09302436130xxx**
-144	2.498	2.676	**xxxxFRx09302498130xxx**
-145	2.561	2.739	**xxxxFRx09302561130xxx**
-146	2.623	2.801	**xxxxFRx09302623130xxx**
-147	2.686	2.864	**xxxxFRx09302686130xxx**
-148	2.748	2.926	**xxxxFRx09302748130xxx**
-149	2.811	2.989	**xxxxFRx09302811130xxx**
R = 0.015" max. radius E = 0.003" max. G for Standard heel groove = 0.188/0.198" (170 callout) G for Extended heel groove = 0.235/0.245" (220 callout)			
	+.000/ -.002	+.002/ -.000	
-210	0.748	0.991	**xxxxFRx12500748170xxx**
-211	0.810	1.053	**xxxxFRx12500810170xxx**
-212	0.873	1.116	**xxxxFRx12500873170xxx**
-213	0.935	1.178	**xxxxFRx12500935170xxx**
-214	0.998	1.241	**xxxxFRx12500998170xxx**
-215	1.060	1.303	**xxxxFRx12501060170xxx**
-216	1.123	1.366	**xxxxFRx12501123170xxx**
-217	1.185	1.428	**xxxxFRx12501185170xxx**
-218	1.248	1.491	**xxxxFRx12501248170xxx**
-219	1.310	1.553	**xxxxFRx12501310170xxx**
-220	1.373	1.616	**xxxxFRx12501373170xxx**
-221	1.435	1.678	**xxxxFRx12501435170xxx**
-222	1.498	1.741	**xxxxFRx12501498170xxx**
-223	1.623	1.866	**xxxxFRx12501623170xxx**
-224	1.748	1.991	**xxxxFRx12501748170xxx**
-225	1.873	2.116	**xxxxFRx12501873170xxx**
-226	1.998	2.241	**xxxxFRx12501998170xxx**
-227	2.123	2.366	**xxxxFRx12502123170xxx**
-228	2.248	2.491	**xxxxFRx12502248170xxx**
-229	2.373	2.616	**xxxxFRx12502373170xxx**
-230	2.498	2.741	**xxxxFRx12502498170xxx**
-231	2.623	2.866	**xxxxFRx12502623170xxx**
-232	2.748	2.991	**xxxxFRx12502748170xxx**
-233	2.873	3.116	**xxxxFRx12502873170xxx**
-234	2.997	3.240	**xxxxFRx12502997170xxx**
-235	3.122	3.365	**xxxxFRx12503122170xxx**
-236	3.247	3.490	**xxxxFRx12503247170xxx**
-237	3.372	3.615	**xxxxFRx12503372170xxx**

01/15/07

Parker Hannifin Corporation
EPS Division
Tel: (801) 972-3000
Fax: (801) 973-4019

Table 5-12. FR MIL-G-5514 Rod Gland Dimensions (Continued)

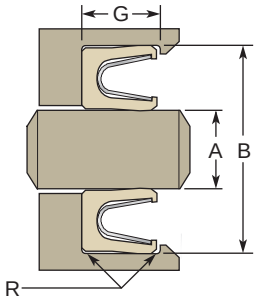

Rod Seal

Dash #	A Rod Diameter	B Groove Diameter	Part Number

R = 0.015" max. radius
E = 0.003" max.
G for Standard heel groove = 0.188/0.198" (170 callout)
G for Extended heel groove = 0.235/0.245" (220 callout)

	+.000/ -.002	+.002/ -.000	
-238	3.497	3.740	**xxxxFRx12503497170xxx**
-239	3.622	3.865	**xxxxFRx12503622170xxx**
-240	3.747	3.990	**xxxxFRx12503747170xxx**
-241	3.872	4.115	**xxxxFRx12503872170xxx**
-242	3.997	4.240	**xxxxFRx12503997170xxx**
-243	4.122	4.365	**xxxxFRx12504122170xxx**
-244	4.247	4.490	**xxxxFRx12504247170xxx**
-245	4.372	4.615	**xxxxFRx12504372170xxx**
-246	4.497	4.740	**xxxxFRx12504497170xxx**
-247	4.622	4.865	**xxxxFRx12504622170xxx**

R = 0.015" max. radius
E = 0.003" max.
G for Standard heel groove = 0.281/0.291" (260 callout)
G for Extended heel groove = 0.334/0.344" (310 callout)

	+.000/ -.002	+.002/ -.000	
-325	1.498	1.870	**xxxxFRx18701498260xxx**
-326	1.623	1.995	**xxxxFRx18701623260xxx**
-327	1.748	2.120	**xxxxFRx18701748260xxx**
-328	1.873	2.245	**xxxxFRx18701873260xxx**
-329	1.998	2.370	**xxxxFRx18701998260xxx**
-330	2.123	2.495	**xxxxFRx18702123260xxx**
-331	2.248	2.620	**xxxxFRx18702248260xxx**
-332	2.373	2.745	**xxxxFRx18702373260xxx**
-333	2.498	2.870	**xxxxFRx18702498260xxx**
-334	2.623	2.995	**xxxxFRx18702623260xxx**
-335	2.748	3.120	**xxxxFRx18702748260xxx**
-336	2.873	3.245	**xxxxFRx18702873260xxx**
-337	2.997	3.369	**xxxxFRx18702997260xxx**
-338	3.122	3.494	**xxxxFRx18703122260xxx**
-339	3.247	3.619	**xxxxFRx18703247260xxx**
-340	3.372	3.744	**xxxxFRx18703372260xxx**

Dash #	A Rod Diameter	B Groove Diameter	Part Number
-341	3.497	3.869	**xxxxFRx18703497260xxx**
-342	3.622	3.994	**xxxxFRx18703622260xxx**
-343	3.747	4.119	**xxxxFRx18703747260xxx**
-344	3.872	4.244	**xxxxFRx18703872260xxx**
-345	3.997	4.369	**xxxxFRx18703997260xxx**
-346	4.122	4.494	**xxxxFRx18704122260xxx**
-347	4.247	4.619	**xxxxFRx18704247260xxx**
-348	4.372	4.744	**xxxxFRx18704372260xxx**
-349	4.497	4.869	**xxxxFRx18704497260xxx**

R = 0.015" max. radius
E = 0.004" max.
G for Standard heel groove = 0.375/0.385" (355 callout)
G for Extended heel groove = 0.475/0.485" (450 callout)

	+.000/ -.003	+.003/ -.000	
-425	4.497	4.974	**xxxxFRx25004497355xxx**
-426	4.622	5.099	**xxxxFRx25004622355xxx**
-427	4.747	5.224	**xxxxFRx25004747355xxx**
-428	4.872	5.349	**xxxxFRx25004872355xxx**
-429	4.997	5.474	**xxxxFRx25004997355xxx**
-430	5.122	5.599	**xxxxFRx25005122355xxx**
-431	5.247	5.724	**xxxxFRx25005247355xxx**
-432	5.372	5.849	**xxxxFRx25005372355xxx**
-433	5.497	5.974	**xxxxFRx25005497355xxx**
-434	5.622	6.099	**xxxxFRx25005622355xxx**
-435	5.747	6.224	**xxxxFRx25005747355xxx**
-436	5.872	6.349	**xxxxFRx25005872355xxx**
-437	5.997	6.474	**xxxxFRx25005997355xxx**
-438	6.247	6.724	**xxxxFRx25006247355xxx**
-439	6.497	6.974	**xxxxFRx25006497355xxx**
-440	6.747	7.224	**xxxxFRx25006747355xxx**
-441	6.997	7.474	**xxxxFRx25006997355xxx**
-442	7.247	7.724	**xxxxFRx25007247355xxx**
-443	7.497	7.974	**xxxxFRx25007497355xxx**
-444	7.747	8.224	**xxxxFRx25007747355xxx**
-445	7.997	8.474	**xxxxFRx25007997355xxx**
-446	8.497	8.974	**xxxxFRx25008497355xxx**

Parker Hannifin Corporation
EPS Division
Tel: (801) 972-3000
Fax: (801) 973-4019

Table 5-12. FR MIL-G-5514 Rod Gland Dimensions (Continued)

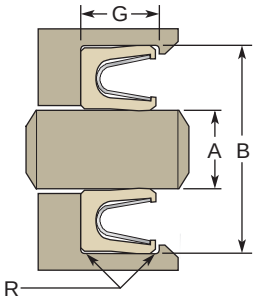

Rod Seal

Dash #	A Rod Diameter	B Groove Diameter	Part Number
R = 0.015" max. radius E = 0.004" max. G for Standard heel groove = 0.375/0.385" (355 callout) G for Extended heel groove = 0.475/0.485" (450 callout)			
	+.000/ -.003	**+.004/ -.000**	
-447	8.997	9.474	**xxxxFRx25008997355xxx**
-448	9.497	9.974	**xxxxFRx25009497355xxx**
-449	9.997	10.474	**xxxxFRx25009997355xxx**
-450	10.497	10.974	**xxxxFRx25010497355xxx**
-451	10.997	11.474	**xxxxFRx25010997355xxx**
-452	11.497	11.974	**xxxxFRx25011497355xxx**

Dash #	A Rod Diameter	B Groove Diameter	Part Number
-453	11.997	12.474	**xxxxFRx25011997355xxx**
-454	12.497	12.974	**xxxxFRx25012497355xxx**
-455	12.997	13.474	**xxxxFRx25012997355xxx**
-456	13.497	13.974	**xxxxFRx25013497355xxx**
-457	13.997	14.474	**xxxxFRx25013997355xxx**
-458	14.497	14.974	**xxxxFRx25014497355xxx**
-459	14.997	14.474	**xxxxFRx25014997355xxx**
-460	15.497	15.974	**xxxxFRx25015497355xxx**

01/15/06

Parker Hannifin Corporation
EPS Division
Tel: (801) 972-3000
Fax: (801) 973-4019

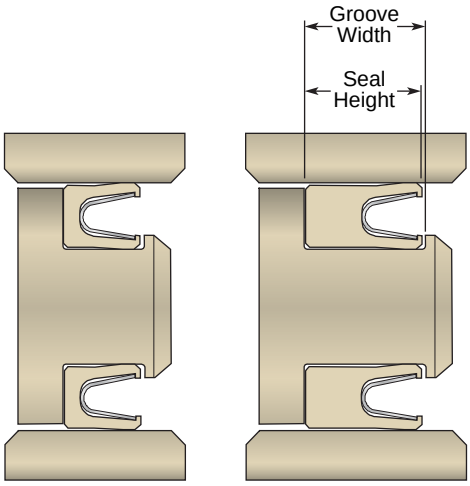

Standard Heel *Extended Heel*

Table 5-13. Seal Height Callouts

Radial Cross-Section	Standard Heel Callout	Extended Heel Callout
062	083	140
093	130	165
125	170	220
187	260	310
250	355	450

FP Profiles

All FP profiles will fit into the MIL-G-5514 piston gland tables on the following pages.

Design Considerations

- Hardware Configurations/Installation, see **Page 2-3**
- Surface Finish and Hardness, see **Page 2-9**
- Extrusion Gaps and High Pressure, see **Page 2-10**
- Spring Choices, see **Page 2-12**
- Lip Shapes, see **Page 2-16**
- Shaft Misalignment Issues, see **Page 2-19**

Part Number Example

Table 5-14. FP MIL-G-5514 Piston Part Number

0 5 0 2 **FP C** 1 2 5 0 1 3 1 0 1 7 0 S **V** M

O-Ring Groove — Piston Chamfered ID & OD Lip

Cantilever Spring

Extended Heel Option

All part numbers on the following pages call for the standard seal height for pressures below 3000 psi.

The heel of a FlexiSeal can be extended to increase extrusion resistance simply by changing the seal height callout in the part number.

0 5 0 2 F P C 0 6 2 0 1 3 1 6 **0 8 3** S V M

Seal Height

Just find where the G dimension for the groove width is designated in the gland tables and switch to the longer extended heel callout in the part number.

0 5 0 2 F P C 0 6 2 0 1 3 1 6 **1 4 0** S V M

Seal Height

01/15/07

Parker Hannifin Corporation
EPS Division
Tel: (801) 972-3000
Fax: (801) 973-4019

www.parker.com/eps

Gland Dimensions — FP Profiles

Table 5-15. FP MIL-G-5514 Piston Gland Dimensions

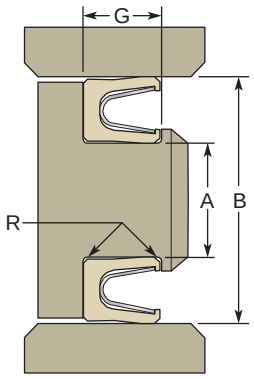

Piston Seal

Each of these FlexiSeal profiles were designed to fit into the MIL-G-5514 piston glands on the following pages.

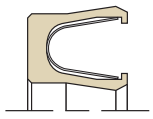

FPC-V

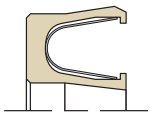

FPS-V

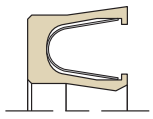

FPG-V

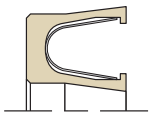

FPD-V

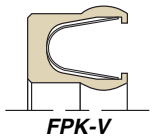

FPK-V

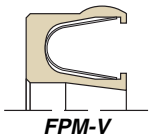

FPM-V

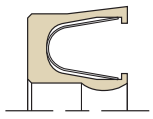

FPL-V

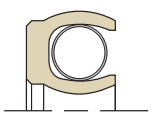

FPN-H

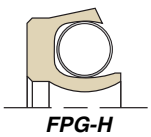

FPG-H

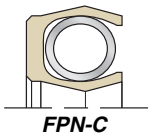

FPN-C

FPS-C

Dash #	A Groove Diameter	B Bore Diameter	Part Number
R = 0.015" max. radius E = 0.002" max. G for Standard heel groove = 0.094/0.104" (083 callout) G for Extended heel groove = 0.149/0.159" (140 callout)			
	+.000/ -.001	**+.001/ -.000**	
-006	0.123	0.235	**xxxxFPx06200123083xxx**
-007	0.154	0.266	**xxxxFPx06200154083xxx**
-008	0.185	0.297	**xxxxFPx06200185083xxx**
-009	0.217	0.329	**xxxxFPx06200217083xxx**
-010	0.248	0.360	**xxxxFPx06200248083xxx**
-011	0.310	0.422	**xxxxFPx06200310083xxx**
-012	0.373	0.485	**xxxxFPx06200373083xxx**
	+.000/ -.002	**+.002/ -.000**	
-013	0.438	0.550	**xxxxFPx06200438083xxx**
-014	0.501	0.613	**xxxxFPx06200501083xxx**
-015	0.563	0.675	**xxxxFPx06200563083xxx**
-016	0.626	0.738	**xxxxFPx06200626083xxx**
-017	0.688	0.800	**xxxxFPx06200688083xxx**
-018	0.751	0.863	**xxxxFPx06200751083xxx**
-019	0.813	0.925	**xxxxFPx06200813083xxx**
-020	0.879	0.991	**xxxxFPx06200879083xxx**
-021	0.941	1.053	**xxxxFPx06200941083xxx**
-022	1.004	1.116	**xxxxFPx06201004083xxx**
-023	1.066	1.178	**xxxxFPx06201066083xxx**
-024	1.129	1.241	**xxxxFPx06201129083xxx**
-025	1.191	1.303	**xxxxFPx06201191083xxx**
-026	1.254	1.366	**xxxxFPx06201254083xxx**
-027	1.316	1.428	**xxxxFPx06201316083xxx**
-028	1.379	1.491	**xxxxFPx06201379083xxx**

01/15/06

Parker Hannifin Corporation
EPS Division
Tel: (801) 972-3000
Fax: (801) 973-4019

Table 5-15. FP MIL-G-5514 Piston Gland Dimensions (Continued)

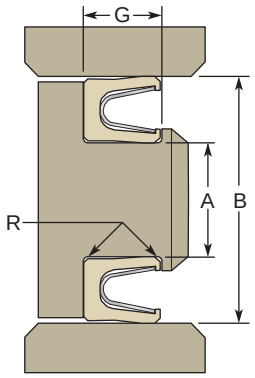

Piston Seal

Dash #	A Groove Diameter	B Bore Diameter	Part Number
R = 0.015" max. radius E = 0.002" max. G for Standard heel groove = 0.141/0.151" (130 callout) G for Extended heel groove = 0.183/0.193" (165 callout)			
	+.000/ -.002	+.002/ -.000	
-110	0.372	0.550	**xxxxFPx09300372130xxx**
-111	0.435	0.613	**xxxxFPx09300435130xxx**
-112	0.497	0.675	**xxxxFPx09300497130xxx**
-113	0.560	0.738	**xxxxFPx09300560130xxx**
-114	0.622	0.800	**xxxxFPx09300622130xxx**
-115	0.685	0.863	**xxxxFPx09300685130xxx**
-116	0.747	0.925	**xxxxFPx09300747130xxx**
-117	0.813	0.991	**xxxxFPx09300813130xxx**
-118	0.875	1.053	**xxxxFPx09300875130xxx**
-119	0.938	1.116	**xxxxFPx09300938130xxx**
-120	1.000	1.178	**xxxxFPx09301000130xxx**
-121	1.063	1.241	**xxxxFPx09301063130xxx**
-122	1.125	1.303	**xxxxFPx09301125130xxx**
-123	1.188	1.366	**xxxxFPx09301188130xxx**
-124	1.250	1.428	**xxxxFPx09301250130xxx**
-125	1.313	1.491	**xxxxFPx09301313130xxx**
-126	1.375	1.553	**xxxxFPx09301375130xxx**
-127	1.438	1.616	**xxxxFPx09301438130xxx**
-128	1.500	1.678	**xxxxFPx09301500130xxx**
-129	1.563	1.741	**xxxxFPx09301563130xxx**
-130	1.627	1.805	**xxxxFPx09301627130xxx**
-131	1.689	1.867	**xxxxFPx09301689130xxx**
-132	1.752	1.930	**xxxxFPx09301752130xxx**
-133	1.814	1.992	**xxxxFPx09301814130xxx**
-134	1.877	2.055	**xxxxFPx09301877130xxx**
-135	1.940	2.118	**xxxxFPx09301940130xxx**
-136	2.002	2.180	**xxxxFPx09302002130xxx**
-137	2.065	2.243	**xxxxFPx09302065130xxx**
-138	2.127	2.305	**xxxxFPx09302127130xxx**
-139	2.190	2.368	**xxxxFPx09302190130xxx**
-140	2.252	2.430	**xxxxFPx09302252130xxx**
-141	2.315	2.493	**xxxxFPx09302315130xxx**
-142	2.377	2.555	**xxxxFPx09302377130xxx**
-143	2.440	2.618	**xxxxFPx09302440130xxx**
-144	2.502	2.680	**xxxxFPx09302502130xxx**
-145	2.565	2.743	**xxxxFPx09302565130xxx**
-146	2.627	2.805	**xxxxFPx09302627130xxx**
-147	2.690	2.868	**xxxxFPx09302690130xxx**
-148	2.752	2.930	**xxxxFPx09302752130xxx**
-149	2.815	2.993	**xxxxFPx09302815130xxx**
R = 0.015" max. radius E = 0.003" max. G for Standard heel groove = 0.188/0.198" (170 callout) G for Extended heel groove = 0.235/0.245" (220 callout)			
	+.000/ -.002	+.002/ -.000	
-210	0.748	0.991	**xxxxFPx12500748170xxx**
-211	0.810	1.053	**xxxxFPx12500810170xxx**
-212	0.873	1.116	**xxxxFPx12500873170xxx**
-213	0.935	1.178	**xxxxFPx12500935170xxx**
-214	0.998	1.241	**xxxxFPx12500998170xxx**
-215	1.060	1.303	**xxxxFPx12501060170xxx**
-216	1.123	1.366	**xxxxFPx12501123170xxx**
-217	1.185	1.428	**xxxxFPx12501185170xxx**
-218	1.248	1.491	**xxxxFPx12501248170xxx**
-219	1.310	1.553	**xxxxFPx12501310170xxx**
-220	1.373	1.616	**xxxxFPx12501373170xxx**
-221	1.435	1.678	**xxxxFPx12501435170xxx**
-222	1.498	1.741	**xxxxFPx12501498170xxx**
-223	1.624	1.867	**xxxxFPx12501624170xxx**
-224	1.749	1.992	**xxxxFPx12501749170xxx**
-225	1.875	2.118	**xxxxFPx12501875170xxx**
-226	2.000	2.243	**xxxxFPx12502000170xxx**
-227	2.125	2.368	**xxxxFPx12502125170xxx**
-228	2.250	2.493	**xxxxFPx12502250170xxx**
-229	2.375	2.618	**xxxxFPx12502375170xxx**
-230	2.500	2.743	**xxxxFPx12502500170xxx**
-231	2.625	2.868	**xxxxFPx12502625170xxx**
-232	2.750	2.993	**xxxxFPx12502750170xxx**

01/15/07

Parker Hannifin Corporation
EPS Division
Tel: (801) 972-3000
Fax: (801) 973-4019

Table 5-15. FP MIL-G-5514 Piston Gland Dimensions (Continued)

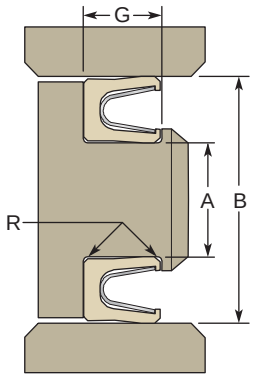

Piston Seal

Dash #	A Groove Diameter	B Bore Diameter	Part Number

R = 0.015" max. radius
E = 0.003" max.
G for Standard heel groove = 0.188/0.198" (170 callout)
G for Extended heel groove = 0.235/0.245" (220 callout)

	+.000/ -.002	+.002/ -.000	
-233	2.875	3.118	**xxxxFPx12502875170xxx**
-234	3.000	3.243	**xxxxFPx12503000170xxx**
-235	3.125	3.368	**xxxxFPx12503125170xxx**
-236	3.250	3.493	**xxxxFPx12503250170xxx**
-237	3.375	3.618	**xxxxFPx12503375170xxx**
-238	3.500	3.743	**xxxxFPx12503500170xxx**
-239	3.625	3.868	**xxxxFPx12503625170xxx**
-240	3.750	3.993	**xxxxFPx12503750170xxx**
-241	3.875	4.118	**xxxxFPx12503875170xxx**
-242	4.000	4.243	**xxxxFPx12504000170xxx**
-243	4.125	4.368	**xxxxFPx12504125170xxx**
-244	4.250	4.493	**xxxxFPx12504250170xxx**
-245	4.375	4.618	**xxxxFPx12504375170xxx**
-246	4.500	4.743	**xxxxFPx12504500170xxx**
-247	4.625	4.868	**xxxxFPx12504625170xxx**

R = 0.015" max. radius
E = 0.003" max.
G for Standard heel groove = 0.281/0.291" (260 callout)
G for Extended heel groove = 0.334/0.344" (310 callout)

	+.000/ -.002	+.002/ -.000	
-325	1.495	1.867	**xxxxFPx18701495260xxx**
-326	1.620	1.992	**xxxxFPx18701620260xxx**
-327	1.746	2.118	**xxxxFPx18701746260xxx**
-328	1.871	2.243	**xxxxFPx18701871260xxx**
-329	1.996	2.368	**xxxxFPx18701996260xxx**
-330	2.121	2.493	**xxxxFPx18702121260xxx**
-331	2.246	2.618	**xxxxFPx18702246260xxx**
-332	2.371	2.743	**xxxxFPx18702371260xxx**
-333	2.496	2.868	**xxxxFPx18702496260xxx**
-334	2.621	2.993	**xxxxFPx18702621260xxx**
-335	2.746	3.118	**xxxxFPx18702746260xxx**
-336	2.871	3.243	**xxxxFPx18702871260xxx**

Dash #	A Groove Diameter	B Bore Diameter	Part Number
-337	2.996	3.368	**xxxxFPx18702996260xxx**
-338	3.121	3.493	**xxxxFPx18703121260xxx**
-339	3.246	3.618	**xxxxFPx18703246260xxx**
-340	3.371	3.743	**xxxxFPx18703371260xxx**
-341	3.496	3.868	**xxxxFPx18703496260xxx**
-342	3.621	3.993	**xxxxFPx18703621260xxx**
-343	3.746	4.118	**xxxxFPx18703746260xxx**
-344	3.871	4.243	**xxxxFPx18703871260xxx**
-345	3.996	4.368	**xxxxFPx18703996260xxx**
-346	4.121	4.493	**xxxxFPx18704121260xxx**
-347	4.246	4.618	**xxxxFPx18704246260xxx**
-348	4.371	4.743	**xxxxFPx18704371260xxx**
-349	4.496	4.868	**xxxxFPx18704496260xxx**

R = 0.015" max. radius
E = 0.004" max.
G for Standard heel groove = 0.375/0.385" (355 callout)
G for Extended heel groove = 0.475/0.485" (450 callout)

	+.000/ -.003	+.002/ -.000	
-425	4.497	4.974	**xxxxFPx25004497355xxx**
-426	4.622	5.099	**xxxxFPx25004622355xxx**
-427	4.747	5.224	**xxxxFPx25004747355xxx**
-428	4.872	5.349	**xxxxFPx25004872355xxx**
-429	4.997	5.474	**xxxxFPx25004997355xxx**
-430	5.122	5.599	**xxxxFPx25005122355xxx**
-431	5.247	5.724	**xxxxFPx25005247355xxx**
-432	5.372	5.849	**xxxxFPx25005372355xxx**
-433	5.497	5.974	**xxxxFPx25005497355xxx**
-434	5.622	6.099	**xxxxFPx25005622355xxx**
-435	5.747	6.224	**xxxxFPx25005747355xxx**
-436	5.872	6.349	**xxxxFPx25005872355xxx**
-437	5.997	6.474	**xxxxFPx25005997355xxx**
-438	6.247	6.724	**xxxxFPx25006247355xxx**
-439	6.497	6.974	**xxxxFPx25006497355xxx**
-440	6.747	7.224	**xxxxFPx25006747355xxx**
-441	6.997	7.474	**xxxxFPx25006997355xxx**
-442	7.247	7.724	**xxxxFPx25007247355xxx**

01/15/07

Parker Hannifin Corporation
EPS Division
Tel: (801) 972-3000
Fax: (801) 973-4019

Table 5-15. FP MIL-G-5514 Piston Gland Dimensions (Continued)

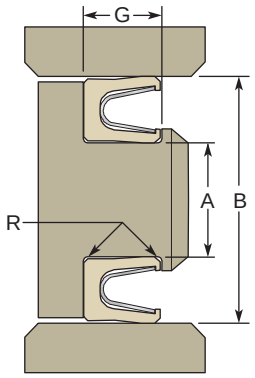

Piston Seal

R = 0.015" max. radius
E = 0.004" max.
G for Standard heel groove = 0.375/0.385" (355 callout)
G for Extended heel groove = 0.475/0.485" (450 callout)

Dash #	A Groove Diameter	B Bore Diameter	Part Number
	+.000/ -.003	+.003 /-.000	
-443	7.497	7.974	**xxxxFPx25007497355xxx**
-444	7.747	8.224	**xxxxFPx25007747355xxx**
-445	7.997	8.474	**xxxxFPx25007997355xxx**
-446	8.497	8.974	**xxxxFPx25008497355xxx**
	+.000/-.003	+.004/-.000	
-447	8.997	9.474	**xxxxFPx25008997355xxx**
-448	9.497	9.974	**xxxxFPx25009497355xxx**
-449	9.997	10.474	**xxxxFPx25009997355xxx**
-450	10.497	10.974	**xxxxFPx25010497355xxx**
-451	10.997	11.474	**xxxxFPx25010997355xxx**
-452	11.497	11.974	**xxxxFPx25011497355xxx**
-453	11.997	12.474	**xxxxFPx25011997355xxx**
-454	12.497	12.974	**xxxxFPx25012497355xxx**
-455	12.997	13.474	**xxxxFPx25012997355xxx**
-456	13.497	13.974	**xxxxFPx25013497355xxx**
-457	13.997	14.474	**xxxxFPx25013997355xxx**
-458	14.497	14.974	**xxxxFPx25014497355xxx**
-459	14.997	15.474	**xxxxFPx25014997355xxx**
-460	15.497	15.974	**xxxxFPx25015497355xxx**

Parker Hannifin Corporation
EPS Division
Tel: (801) 972-3000
Fax: (801) 973-4019

FlexiSeal® Face Seals
Introduction

Contents

Engineering 6-2
Materials 6-3
Product Offering 6-4
FlexiSeal™ Face Seal
FE Profiles — External Pressure Face Seals 6-8
FI Profiles — Internal Pressure Face Seals 6-14
FE & FI Profiles — Metric 6-20

FlexiSeal Face Seals

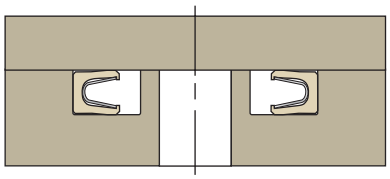

Internal Pressure

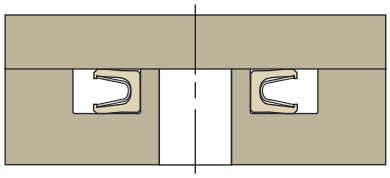

External Pressure

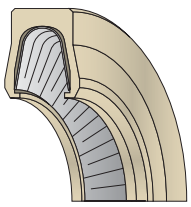

Internal Face Seal

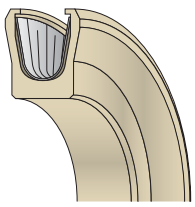

External Face Seal

Internal/external pressure face seals drop in like O-rings.

Creating a face seal gland can be as simple as cutting a groove in the face of the hardware and dropping the FlexiSeal into it like an O-ring. The FlexiSeal is designed to have a clearance fit on the non-pressure side of the seal so it will press easily into the groove. Of course it is not necessary to have a completely enclosed gland wall on the pressure side since the forces will never push the seal against that side of the groove.

Face seals can be configured to seal internal pressure like in a pressurized chemical vat, or as an external seal like in a vacuum chamber.

6

Applications

The FlexiSeal face seal's advantages over conventional elastomeric seals make it ideal for many applications including:

- Chemical Vats
- Dynamic Rotary Dust Excluders
- Pressurized Beverage Containers
- Quick Disconnects
- Scroll Compressors
- Vacuum Chambers
- Many more

Markets

FlexiSeal face seals are easy to install and suitable for the extreme conditions of many markets including:

- Aerospace
- Chemical Process
- Appliances
- Machine Tools
- Medical
- Pharmaceutical
- Food & Beverage
- Oil & Gas
- Semiconductor
- Plastics

01/15/06

Parker Hannifin Corporation
EPS Division
Tel: (801) 972-3000
Fax: (801) 973-4019
www.parker.com/eps

Choosing the Right Design

Face seals are used in applications involving high pressures and temperatures, cryogenic fluids, corrosive media and other service conditions which exceed the limits of conventional elastomeric seals.

Face seals are designed for either internal or external pressure. For internal pressure, the open side of the spring cavity faces the inside of the vessel. Fluid pressure actuates the seal lips. For external pressure, the spring cavity faces out (see illustration on **Page 6-1**).

Gland Design

Face seal glands are similar to O-ring glands. The inner wall of the internal face seal gland and the outer wall of the external face seal gland are not required to retain the seal. The FlexiSeal Face Seal maintains its own shape and won't move out of its gland.

Surface Finish

The typical surface finish for a static face seal gland is 16 – 32 μin Ra. A smoother finish may be needed when sealing light gases or cryogenic fluids, or in dynamic service. General surface finish requirements are discussed in further detail on **Page 2-9**.

Extrusion Gap

In face seal hardware, the extrusion gap is usually zero. It can be as much as 0.003 inches without affecting the seal's rated pressure. When the lifting force due to fluid pressure exceeds the holding force of the vessel's flange bolts, the top of the gland can separate from the cylinder, increasing the extrusion gap. In such applications, a separate backup ring is recommended to fill the gap.

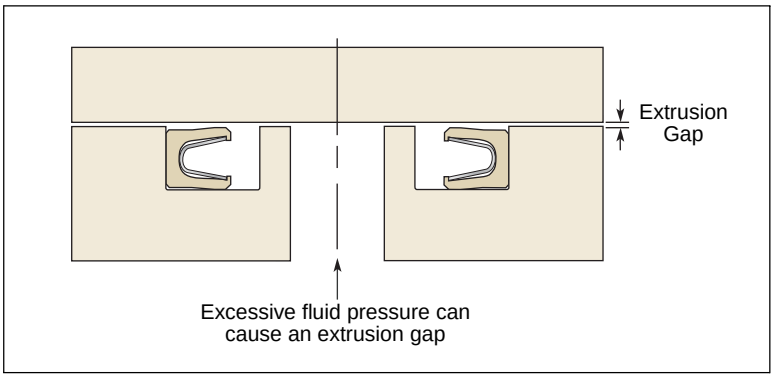

Figure 6-1. Fluid Pressure Causes Extrusion Gap

Spring Load

For static sealing, use a medium or heavy spring load. In dynamic service the medium load is usually preferred. In cryogenic service the seal material becomes harder and does not conform to the mating surface as readily; to compensate for the increased hardness of the seal jacket, a heavier spring load should be selected. Light load spring can be used when low closure force is required.

Design Selection

Complete the following steps to select a face seal design.

1. Choose a seal design category based on the type of spring used — V Series with cantilever spring, C Series with canted-coil spring, or H Series with helical ribbon spring. For details on the different spring types and seal design concepts, refer to **Pages 2-12** through **2-17**.
2. Select the seal cross-section and diameter using the gland tables beginning on **Page 6-9**.
3. Select the jacket and spring materials with reference to **Tab 3**.

Parker Hannifin Corporation
EPS Division
Tel: (801) 972-3000
Fax: (801) 973-4019

Common Materials Used in this Product

The most popular PTFE fillers used for FlexiSeal Face Seal products are graphite, carbon fiber and aromatic polyester. Virgin PTFE is also one of the most common material choices for face seals, especially when chemical compatibility is critical.

A number of other fillers are used in combination with PTFE, and non-PTFE compounds are available. More information on these materials and their properties is available in **Tab 3**. For best results for your sealing applications, please contact the EPS Division Application Engineering team at (801) 972-3000.

0100 — Virgin PTFE

Virgin PTFE has the best chemical resistance and lowest coefficient of friction of any of the material choices. Its purity also makes it suitable for food contact applications.

0301 — Graphite Filled

Graphite filled PTFE has extremely low coefficient of friction due to the low friction characteristics of graphite. Graphite is chemically inert. Graphite imparts excellent wear properties and high PV to PTFE.

0502 — Carbon Fiber Filled

Carbon fiber lowers creep, increases flex and compressive modulus and raises hardness. Coefficient of thermal expansion is lowered and thermal conductivity is higher for compounds of carbon fiber filled PTFE. Ideal for automotive applications in shock absorbers and water pumps.

0601 — Aromatic Polyester Filled

Aromatic polyester is excellent for high temperatures and has excellent wear resistance against soft, dynamic surfaces. Not recommended for sealing applications involving steam.

Parker Hannifin Corporation
EPS Division
Tel: (801) 972-3000
Fax: (801) 973-4019

The key application considerations for static & intermittent dynamic face seal applications are closure force requirements, motion, media abrasiveness and pressure direction. Helical springs are recommended when the seals are mostly static, while canted-coil springs are recommended for dynamic applications.

The decision trees in this guide are to be used as an engineering guide only. Often several other parameters must be considered to optimize seal design. Contact Parker's PTFE Engineering Team for confirmation of your choice or further recommendations. Parker also recommends that any seal be tested in the application conditions before releasing for production.

Decision Trees

Static & Intermittent Dynamic Face Seal Applications

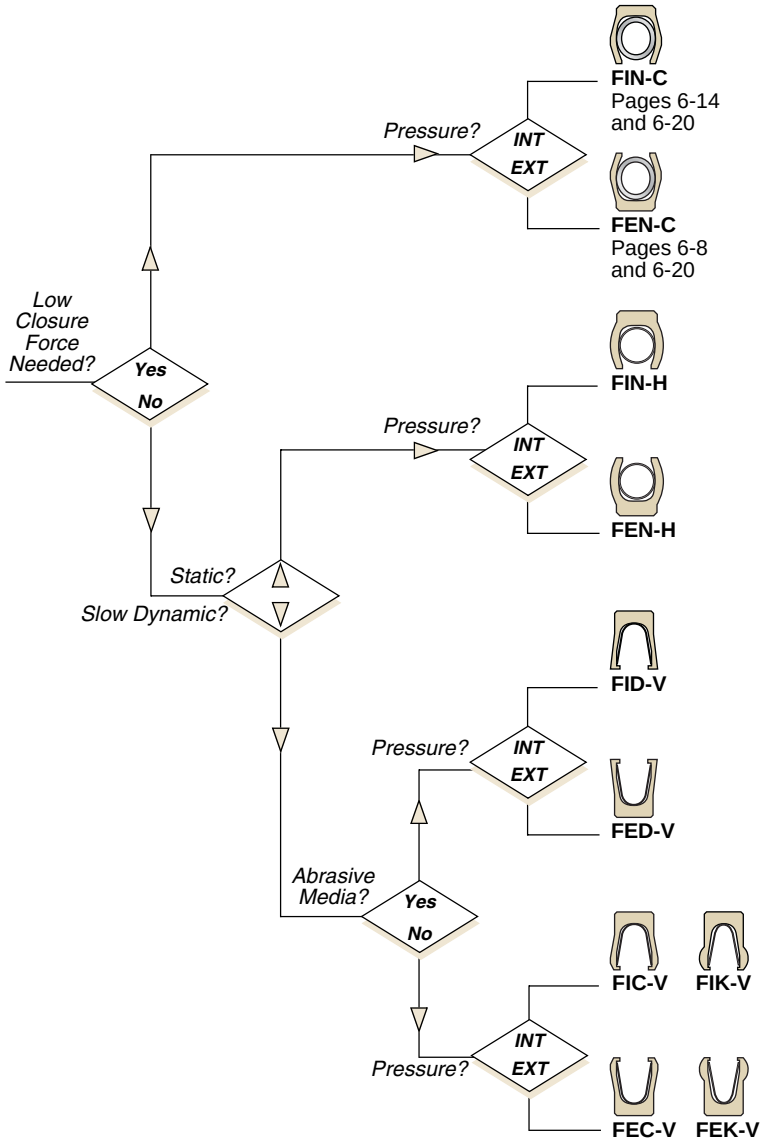

01/15/06

Parker Hannifin Corporation
EPS Division
Tel: (801) 972-3000
Fax: (801) 973-4019

Part Number Nomenclature — FlexiSeal Face Seal

Table 6-1. FlexiSeal Face Seal Part Number Nomenclature

English

0 3 0 1	FE	N	1 2 5	0 1 2 5 0	1 7 0	S	C	L

- **0 3 0 1** — 4-Digit Material Code
  Examples:
  0301 = Graphite Filled PTFE
  0502 = Carbon Fiber Filled PTFE
- **FE** — FlexiSeal Gland Type Classification
  FE = External Face Seal
  FI = Internal Face Seal
- **N** — Lip Style Designation
  N = Default/No Lip Style
  C = Chamfered ID & OD
  D = Dual Scraper
  K = Beaded ID & OD
- **1 2 5** — Gland Cross-Section
  Examples:
  062 = 0.062"
  093 = 0.093"
  125 = 0.125"
  187 = 0.187"
  250 = 0.250"
- **0 1 2 5 0** — Gland Inside Diameter (Groove Diameter)
  Examples:
  00500 = 0.500"
  02500 = 2.500"
  11000 = 11.000"
- **1 7 0** — Seal Height Designation
  Examples:
  083 = 0.083"
  130 = 0.130"
  170 = 0.170"
  260 = 0.260"
  355 = 0.355"
- **S** — Spring Material
  E = ELGILOY
  S = Stainless Steel
  H = C-276 alloy
- **C** — Spring Design
  V = Cantilever
  C = Canted-Coil Spring
  H = Helical Spring
  W= White silicone filled Cantilever
  R = Red silicone filled Cantilever
- **L** — Spring Load
  Blank = No Option (Helical Only)
  L = Light
  M = Medium
  H = Heavy

Metric

M 3 0 1	FE	N	0 4 0 0	2 2 5 0 0	0 4 3	S	C	L

- **M 3 0 1** — 4-Digit Material Code
  Examples:
  M301 = Graphite Filled PTFE
  M502 = Carbon Fiber Filled PTFE
  ("M" indicates metric)
- **FE** — FlexiSeal Gland Type Classification
  FE = External Face Seal
  FI = Internal Face Seal
- **N** — Lip Style Designation
  N = Default Lip Style
  C = Chamfered ID & OD
  D = Dual Scraper
  K = Beaded ID & OD
- **0 4 0 0** — Gland Cross-Section
  Examples:
  0200 = 2.00 mm
  0250 = 2.50 mm
  0400 = 4.00 mm
  0500 = 5.00 mm
  0700 = 7.00 mm
- **2 2 5 0 0** — Gland Inside Diameter (Groove Diameter)
  Examples:
  00800 = 8.00 mm
  01150 = 11.50 mm
  06500 = 65.00 mm
- **0 4 3** — Seal Height Designation
  Examples:
  021 = 2.1 mm
  033 = 3.3 mm
  043 = 4.3 mm
  066 = 6.6 mm
  090 = 9.0 mm
- **S** — Spring Material
  E = ELGILOY
  S = Stainless Steel
  H = C-276 alloy
- **C** — Spring Design
  V = Cantilever
  C = Canted-Coil Spring
  H = Helical Spring
  W= White silicone filled Cantilever
  R = Red silicone filled Cantilever
- **L** — Spring Load
  Blank = No Option (Helical Only)
  L = Light
  M = Medium
  H = Heavy

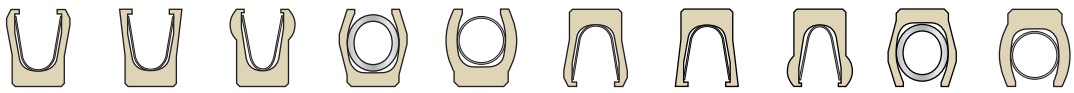

FEC-V *FED-V* *FEK-V* *FEN-C* *FEN-H* *FIC-V* *FID-V* *FIK-V* *FIN-C* *FIN-H*

02/15/08

Parker Hannifin Corporation
EPS Division
Tel: (801) 972-3000
Fax: (801) 973-4019
www.parker.com/eps

Profiles

Table 6-2. Product Profiles

Profile	Features	Recom-mended Applications	Available as Standard in High Pressure Extended Heel (up to 10,000 psi)	Friction Rating	Low Pressure Sealability	Good in Abrasive Media	Gland Dimension Table Location	Available in Mil-G-5514 Glands
FEN-H	Lips Facing Out, Rounded Lips, Helical Spring	Seals external pressure. High sealability and closure force.	No	High Closure Force	Excellent	No	**Pages 6-8, 6-20**	No
FEC-V	Lips Facing Out, Chamfered Lips, Cantilever Spring	Seals external pressure. Good sealability for non-abrasive fluids.	No	Medium Closure Force	Very Good	No	**Pages 6-8, 6-20**	No
FED-V	Lips Facing Out, Scraper Lips, Cantilever Spring	Seals external pressure. Good sealability for abrasive fluids.	No	Medium Closure Force	Very Good	Yes	**Pages 6-8, 6-20**	No
FEK-V	Lips Facing Out, Beaded Lips, Cantilever Spring	Seals external pressure. Good sealability for non-abrasive fluids. Rounded like O-ring.	No	Medium Closure Force	Very Good	No	**Pages 6-8, 6-20**	No
FEN-C 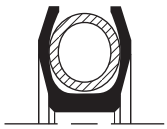	Lips Facing Out, Back-Beveled Lips, Canted-Coil Spring	Seals external pressure. Low closure force for non-abrasive fluids.	No	Low Closure Force	Good	No	**Pages 6-8, 6-20**	No

Parker Hannifin Corporation
EPS Division
Tel: (801) 972-3000
Fax: (801) 973-4019

Table 6-2. Product Profiles (Continued)

Profile	Features	Recom-mended Applications	Available as Standard in High Pressure Extended Heel (up to 10,000 psi)	Friction Rating	Low Pressure Sealability	Good in Abrasive Media	Gland Dimension Table Location	Available in Mil-G-5514 Glands
FIN-H	Lips Facing In, Rounded Lips, Helical Spring	Seals internal pressure. High sealability and closure force.	No	High Closure Force	Excellent	No	**Pages 6-14, 6-20**	No
FIC-V 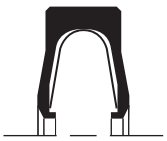	Lips Facing In, Chamfered Lips, Cantilever Spring	Seals internal pressure. Good sealability for non-abrasive fluids.	No	Medium Closure Force	Very Good	No	**Pages 6-14, 6-20**	No
FID-V	Lips Facing In, Scraper Lips, Cantilever Spring	Seals internal pressure. Good sealability for abrasive fluids.	No	Medium Closure Force	Very Good	Yes	**Pages 6-14, 6-20**	No
FIK-V	Lips Facing In, Beaded Lips, Cantilever Spring	Seals internal pressure. Good sealability for non-abrasive fluids. Rounded like O-ring.	No	Medium Closure Force	Very Good	No	**Pages 6-14, 6-20**	No
FIN-C 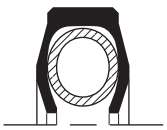	Lips Facing In, Back-Beveled Lips, Canted-Coil Spring	Seals internal pressure. Low closure force for non-abrasive fluids.	No	Low Closure Force	Good	No	**Pages 6-14, 6-20**	No

6

01/15/06

Parker Hannifin Corporation
EPS Division
Tel: (801) 972-3000
Fax: (801) 973-4019
www.parker.com/eps

External Pressure Face Seals

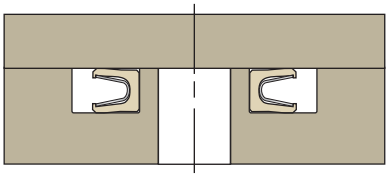

External Pressure

FE Profiles

FE FlexiSeal External Pressure Face Seals are designed so that the spring cavity faces out.

Design Considerations

- Hardware Configurations/Installation, see **Page 2-3**
- Surface Finish and Hardness, see **Page 2-9**
- Extrusion Gaps and High Pressure, see **Page 2-10**
- Spring Choices, see **Page 2-12**
- Lip Shapes, see **Page 2-16**
- Face Seal Gland Considerations, see **Page 6-2**
- Shaft Misalignment Issues, see **Page 2-19**

Part Number Example

Table 6-3. FE External Pressure Part Number

0	3	0	1	FE	N	1	2	5	0	1	2	5	0	1	7	0	S	H
				External Face Seal Default Lip Style														Helical Spring

Parker Hannifin Corporation
EPS Division
Tel: (801) 972-3000
Fax: (801) 973-4019

Gland Dimensions — FE Profiles

Table 6-4. FE External Pressure Gland Dimensions

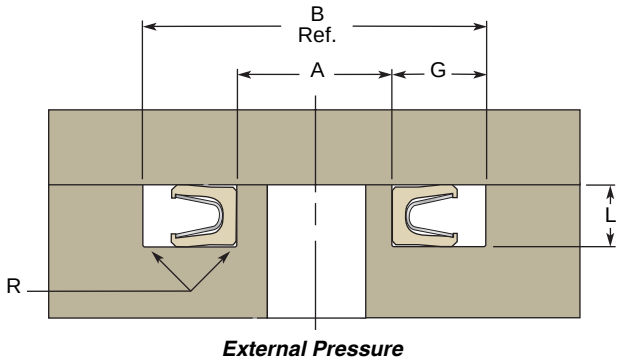

External Pressure

Each of these FlexiSeal profiles were designed to fit into either the Inch/Fractional external pressure face seal glands on the following pages or the Metric glands on **Page 6-20**.

FEN-H

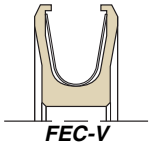

FEC-V

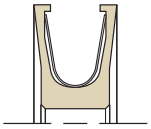

FED-V

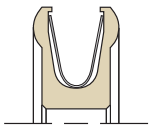

FEK-V

FEN-C

Dash #	A Gland ID	B Min. Gland OD	Part Number
R = 0.007" max. radius L = 0.061/0.063" G = 0.094" minimum			
	+.000/ -.005		
-008	0.187	0.375	**xxxxFEx06200187083xxx**
-009	0.218	0.406	**xxxxFEx06200218083xxx**
-010	0.250	0.437	**xxxxFEx06200250083xxx**
-011	0.312	0.500	**xxxxFEx06200312083xxx**
-012	0.375	0.562	**xxxxFEx06200375083xxx**
-013	0.437	0.625	**xxxxFEx06200437083xxx**
-014	0.500	0.687	**xxxxFEx06200500083xxx**
-015	0.562	0.750	**xxxxFEx06200562083xxx**
-016	0.625	0.812	**xxxxFEx06200625083xxx**
-017	0.687	0.875	**xxxxFEx06200687083xxx**
-018	0.750	0.937	**xxxxFEx06200750083xxx**
-019	0.812	1.000	**xxxxFEx06200812083xxx**
-020	0.875	1.062	**xxxxFEx06200875083xxx**
-021	0.937	1.125	**xxxxFEx06200937083xxx**
-022	1.000	1.187	**xxxxFEx06201000083xxx**
-023	1.062	1.250	**xxxxFEx06201062083xxx**
-024	1.125	1.312	**xxxxFEx06201125083xxx**
-025	1.187	1.375	**xxxxFEx06201187083xxx**
-026	1.250	1.437	**xxxxFEx06201250083xxx**
-027	1.312	1.500	**xxxxFEx06201312083xxx**
-028	1.375	1.562	**xxxxFEx06201375083xxx**
-029	1.500	1.687	**xxxxFEx06201500083xxx**
-030	1.625	1.812	**xxxxFEx06201625083xxx**
-031	1.750	1.937	**xxxxFEx06201750083xxx**
-032	1.875	2.062	**xxxxFEx06201875083xxx**
-033	2.000	2.187	**xxxxFEx06202000083xxx**
-034	2.125	2.312	**xxxxFEx06202125083xxx**
-035	2.250	2.437	**xxxxFEx06202250083xxx**
-036	2.375	2.562	**xxxxFEx06202375083xxx**
-037	2.500	2.687	**xxxxFEx06202500083xxx**
-038	2.625	2.812	**xxxxFEx06202625083xxx**
-039	2.750	2.937	**xxxxFEx06202750083xxx**

02/15/08

Parker Hannifin Corporation
EPS Division
Tel: (801) 972-3000
Fax: (801) 973-4019

Table 6-4. FE External Pressure Gland Dimensions (Continued)

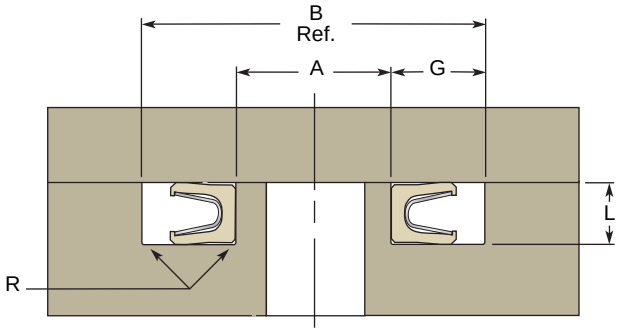

External Pressure

Dash #	A Gland ID	B Min. Gland OD	Part Number
R = 0.007" max. radius L = 0.061/0.063" G = 0.094" minimum			
	+.001/ -.005		
-040	2.875	3.062	xxxxFEx06202875083xxx
-041	3.000	3.187	xxxxFEx06203000083xxx
-042	3.250	3.437	xxxxFEx06203250083xxx
-043	3.500	3.687	xxxxFEx06203500083xxx
-044	3.750	3.937	xxxxFEx06203750083xxx
-045	4.000	4.187	xxxxFEx06204000083xxx
R = 0.010" max. radius L = 0.092/0.094" G = 0.141" minimum			
	+.001/ -.005		
-110	0.375	0.657	xxxxFEx09300375130xxx
-111	0.437	0.719	xxxxFEx09300437130xxx
-112	0.500	0.782	xxxxFEx09300500130xxx
-113	0.562	0.844	xxxxFEx09300562130xxx
-114	0.625	0.907	xxxxFEx09300625130xxx
-115	0.687	0.969	xxxxFEx09300687130xxx
-116	0.750	1.032	xxxxFEx09300750130xxx
-117	0.812	1.094	xxxxFEx09300812130xxx
-118	0.875	1.157	xxxxFEx09300875130xxx
-119	0.937	1.219	xxxxFEx09300937130xxx
-120	1.000	1.282	xxxxFEx09301000130xxx
-121	1.062	1.344	xxxxFEx09301062130xxx
-122	1.125	1.407	xxxxFEx09301125130xxx
-123	1.187	1.469	xxxxFEx09301187130xxx
-124	1.250	1.532	xxxxFEx09301250130xxx
-125	1.312	1.594	xxxxFEx09301312130xxx
-126	1.375	1.657	xxxxFEx09301375130xxx
-127	1.437	1.719	xxxxFEx09301437130xxx
-128	1.500	1.782	xxxxFEx09301500130xxx
-129	1.562	1.844	xxxxFEx09301562130xxx
-130	1.625	1.907	xxxxFEx09301625130xxx
-131	1.687	1.969	xxxxFEx09301687130xxx

Dash #	A Gland ID	B Min. Gland OD	Part Number
-132	1.750	2.032	xxxxFEx09301750130xxx
-133	1.812	2.094	xxxxFEx09301812130xxx
-134	1.875	2.157	xxxxFEx09301875130xxx
-135	1.937	2.219	xxxxFEx09301937130xxx
-136	2.000	2.282	xxxxFEx09302000130xxx
-137	2.062	2.344	xxxxFEx09302062130xxx
-138	2.125	2.407	xxxxFEx09302125130xxx
-139	2.187	2.469	xxxxFEx09302187130xxx
-140	2.250	2.532	xxxxFEx09302250130xxx
-141	2.312	2.594	xxxxFEx09302312130xxx
-142	2.375	2.657	xxxxFEx09302375130xxx
-143	2.437	2.719	xxxxFEx09302437130xxx
-144	2.500	2.782	xxxxFEx09302500130xxx
-145	2.562	2.844	xxxxFEx09302562130xxx
-146	2.625	2.907	xxxxFEx09302625130xxx
-147	2.687	2.969	xxxxFEx09302687130xxx
-148	2.750	3.032	xxxxFEx09302750130xxx
-149	2.812	3.094	xxxxFEx09302812130xxx
-150	2.875	3.157	xxxxFEx09302875130xxx
-151	3.000	3.282	xxxxFEx09303000130xxx
-152	3.250	3.532	xxxxFEx09303250130xxx
-153	3.500	3.782	xxxxFEx09303500130xxx
-154	3.750	4.032	xxxxFEx09303750130xxx
-155	4.000	4.282	xxxxFEx09304000130xxx
-156	4.250	4.532	xxxxFEx09304250130xxx
-157	4.500	4.872	xxxxFEx09304500130xxx
-158	4.750	5.032	xxxxFEx09304750130xxx
-159	5.000	5.282	xxxxFEx09305000130xxx
-160	5.250	5.532	xxxxFEx09305250130xxx
-161	5.500	5.782	xxxxFEx09305500130xxx
-162	5.750	6.032	xxxxFEx09305750130xxx
-163	6.000	6.282	xxxxFEx09306000130xxx
-164	6.250	6.532	xxxxFEx09306250130xxx
-165	6.500	6.782	xxxxFEx09306500130xxx

02/15/08

Parker Hannifin Corporation
EPS Division
Tel: (801) 972-3000
Fax: (801) 973-4019

Table 6-4. FE External Pressure Gland Dimensions (Continued)

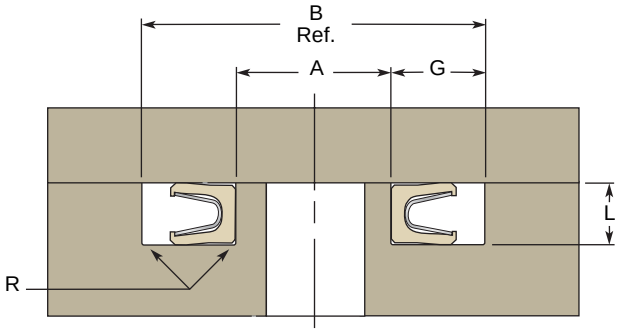

External Pressure

R = 0.010" max. radius
L = 0.124/0.125"
G = 0.188" minimum

Dash #	A Gland ID	B Min. Gland OD	Part Number
	+.001/ -.005		
-208	0.625	1.000	xxxxFEx12500625170xxx
-209	0.687	1.062	xxxxFEx12500687170xxx
-210	0.750	1.125	xxxxFEx12500750170xxx
-211	0.812	1.187	xxxxFEx12500812170xxx
-212	0.875	1.250	xxxxFEx12500875170xxx
-213	0.937	1.312	xxxxFEx12500937170xxx
-214	1.000	1.375	xxxxFEx12501000170xxx
-215	1.062	1.437	xxxxFEx12501062170xxx
-216	1.125	1.500	xxxxFEx12501125170xxx
-217	1.187	1.562	xxxxFEx12501187170xxx
-218	1.250	1.625	xxxxFEx12501250170xxx
-219	1.312	1.687	xxxxFEx12501312170xxx
-220	1.375	1.750	xxxxFEx12501375170xxx
-221	1.437	1.812	xxxxFEx12501437170xxx
-222	1.500	1.875	xxxxFEx12501500170xxx
-223	1.625	2.000	xxxxFEx12501625170xxx
-224	1.750	2.125	xxxxFEx12501750170xxx
-225	1.875	2.250	xxxxFEx12501875170xxx
-226	2.000	2.375	xxxxFEx12502000170xxx
-227	2.125	2.500	xxxxFEx12502125170xxx
-228	2.250	2.625	xxxxFEx12502250170xxx
-229	2.375	2.750	xxxxFEx12502375170xxx
-230	2.500	2.875	xxxxFEx12502500170xxx
-231	2.625	3.000	xxxxFEx12502625170xxx
-232	2.750	3.125	xxxxFEx12502750170xxx
-233	2.875	3.250	xxxxFEx12502875170xxx
-234	3.000	3.375	xxxxFEx12503000170xxx
-235	3.125	3.500	xxxxFEx12503125170xxx
-236	3.250	3.625	xxxxFEx12503250170xxx
-237	3.375	3.750	xxxxFEx12503375170xxx
-238	3.500	3.875	xxxxFEx12503500170xxx
-239	3.625	4.000	xxxxFEx12503625170xxx
-240	3.750	4.125	xxxxFEx12503750170xxx
-241	3.875	4.250	xxxxFEx12503875170xxx
-242	4.000	4.375	xxxxFEx12504000170xxx
-243	4.125	4.500	xxxxFEx12504125170xxx

Dash #	A Gland ID	B Min. Gland OD	Part Number
-244	4.250	4.625	xxxxFEx12504250170xxx
-245	4.375	4.750	xxxxFEx12504375170xxx
-246	4.500	4.875	xxxxFEx12504500170xxx
-247	4.625	5.000	xxxxFEx12504625170xxx
-248	4.750	5.125	xxxxFEx12504750170xxx
-249	4.875	5.250	xxxxFEx12504875170xxx
-250	5.000	5.375	xxxxFEx12505000170xxx
-251	5.125	5.500	xxxxFEx12505125170xxx
-252	5.250	5.625	xxxxFEx12505250170xxx
-253	5.375	5.750	xxxxFEx12505375170xxx
-254	5.500	5.875	xxxxFEx12505500170xxx
-255	5.625	6.000	xxxxFEx12505625170xxx
-256	5.750	6.125	xxxxFEx12505750170xxx
-257	5.875	6.250	xxxxFEx12505875170xxx
-258	6.000	6.375	xxxxFEx12506000170xxx
-259	6.250	6.625	xxxxFEx12506250170xxx
-260	6.500	6.875	xxxxFEx12506500170xxx
-261	6.750	7.125	xxxxFEx12506750170xxx
-262	7.000	7.375	xxxxFEx12507000170xxx
-263	7.250	7.625	xxxxFEx12507250170xxx
-264	7.500	7.875	xxxxFEx12507500170xxx
-265	7.750	8.125	xxxxFEx12507750170xxx
-266	8.000	8.375	xxxxFEx12508000170xxx
-267	8.250	8.625	xxxxFEx12508250170xxx
-268	8.500	8.875	xxxxFEx12508500170xxx
-269	8.750	9.125	xxxxFEx12508750170xxx
-270	9.000	9.375	xxxxFEx12509000170xxx
-271	9.250	9.625	xxxxFEx12509250170xxx
-272	9.500	9.875	xxxxFEx12509500170xxx
-273	9.750	10.125	xxxxFEx12509750170xxx
-274	10.000	10.375	xxxxFEx12510000170xxx
-275	10.500	10.875	xxxxFEx12510500170xxx
-276	11.000	11.375	xxxxFEx12511000170xxx
-277	11.500	11.875	xxxxFEx12511500170xxx
-278	12.000	12.375	xxxxFEx12512000170xxx
-279	13.000	13.375	xxxxFEx12513000170xxx
-280	14.000	14.375	xxxxFEx12514000170xxx
-281	15.000	15.375	xxxxFEx12515000170xxx

02/15/08

Parker Hannifin Corporation
EPS Division
Tel: (801) 972-3000
Fax: (801) 973-4019

Table 6-4. FE External Pressure Gland Dimensions (Continued)

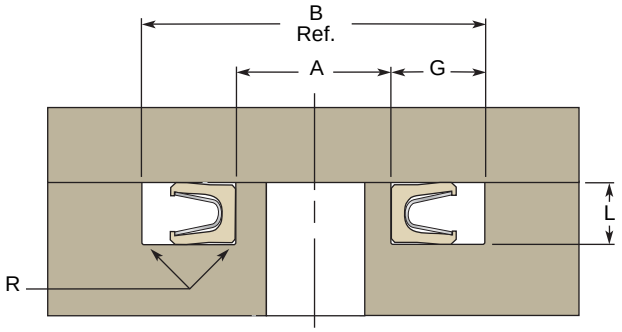

External Pressure

R = 0.015" max. radius
L = 0.186/0.188"
G = 0.281" minimum

Dash #	A Gland ID	B Min. Gland OD	Part Number
	+.001/ -.005		
-325	1.500	2.062	xxxxFEx18701500260xxx
-326	1.625	2.187	xxxxFEx18701625260xxx
-327	1.750	2.312	xxxxFEx18701750260xxx
-328	1.875	2.437	xxxxFEx18701875260xxx
-329	2.000	2.562	xxxxFEx18702000260xxx
-330	2.125	2.687	xxxxFEx18702125260xxx
-331	2.250	2.812	xxxxFEx18702250260xxx
-332	2.375	2.937	xxxxFEx18702375260xxx
-333	2.500	3.062	xxxxFEx18702500260xxx
-334	2.625	3.187	xxxxFEx18702625260xxx
-335	2.750	3.312	xxxxFEx18702750260xxx
-336	2.875	3.437	xxxxFEx18702875260xxx
-337	3.000	3.562	xxxxFEx18703000260xxx
-338	3.125	3.687	xxxxFEx18703125260xxx
-339	3.250	3.812	xxxxFEx18703250260xxx
-340	3.375	3.937	xxxxFEx18703375260xxx
-341	3.500	4.062	xxxxFEx18703500260xxx
-342	3.625	4.187	xxxxFEx18703625260xxx
-343	3.750	4.312	xxxxFEx18703750260xxx
-344	3.875	4.437	xxxxFEx18703875260xxx
-345	4.000	4.562	xxxxFEx18704000260xxx
-346	4.125	4.687	xxxxFEx18704125260xxx
-347	4.250	4.812	xxxxFEx18704250260xxx
-348	4.375	4.937	xxxxFEx18704375260xxx
-349	4.500	5.062	xxxxFEx18704500260xxx
-350	4.625	5.187	xxxxFEx18704625260xxx
-351	4.750	5.312	xxxxFEx18704750260xxx
-352	4.875	5.437	xxxxFEx18704875260xxx
-353	5.000	5.562	xxxxFEx18705000260xxx
-354	5.125	5.687	xxxxFEx18705125260xxx
-355	5.250	5.812	xxxxFEx18705250260xxx
-356	5.375	5.937	xxxxFEx18705375260xxx
-357	5.500	6.062	xxxxFEx18705500260xxx
-358	5.625	6.187	xxxxFEx18705625260xxx
-359	5.750	6.312	xxxxFEx18705750260xxx
-360	5.875	6.437	xxxxFEx18705875260xxx
-361	6.000	6.562	xxxxFEx18706000260xxx
-362	6.250	6.812	xxxxFEx18706250260xxx
-363	6.500	7.062	xxxxFEx18706500260xxx
-364	6.750	7.312	xxxxFEx18706750260xxx
-365	7.000	7.562	xxxxFEx18707000260xxx
-366	7.250	7.812	xxxxFEx18707250260xxx
-367	7.500	8.062	xxxxFEx18707500260xxx
-368	7.750	8.312	xxxxFEx18707750260xxx
-369	8.000	8.562	xxxxFEx18708000260xxx
-370	8.250	8.812	xxxxFEx18708250260xxx
-371	8.500	9.062	xxxxFEx18708500260xxx
-372	8.750	9.312	xxxxFEx18708750260xxx
-373	9.000	9.562	xxxxFEx18709000260xxx
-374	9.250	9.812	xxxxFEx18709250260xxx
-375	9.500	10.062	xxxxFEx18709500260xxx
-376	9.750	10.312	xxxxFEx18709750260xxx
-377	10.000	10.562	xxxxFEx18710000260xxx
-378	10.500	11.062	xxxxFEx18710500260xxx
-379	11.000	11.562	xxxxFEx18711000260xxx
-380	11.500	12.062	xxxxFEx18711500260xxx
-381	12.000	12.562	xxxxFEx18712000260xxx
-382	13.000	13.562	xxxxFEx18713000260xxx
-383	14.000	14.562	xxxxFEx18714000260xxx
-384	15.000	15.562	xxxxFEx18715000260xxx
-385	16.000	16.562	xxxxFEx18716000260xxx
-386	17.000	17.562	xxxxFEx18717000260xxx
-387	18.000	18.562	xxxxFEx18718000260xxx
-388	19.000	19.562	xxxxFEx18719000260xxx
-389	20.000	20.562	xxxxFEx18720000260xxx
-390	21.000	21.562	xxxxFEx18721000260xxx

Parker Hannifin Corporation
EPS Division
Tel: (801) 972-3000
Fax: (801) 973-4019

Table 6-4. FE External Pressure Gland Dimensions (Continued)

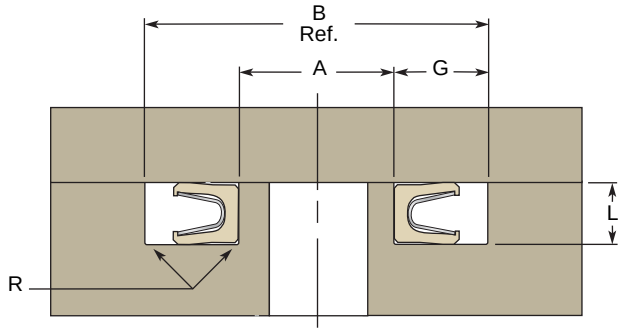

External Pressure

R = 0.015" max. radius
L = 0.249/0.251"
G = 0.375" minimum

Dash #	A Gland ID	B Min. Gland OD	Part Number
	+.001/ -.005		
-425	4.500	5.250	xxxxFEx25004500355xxx
-426	4.625	5.375	xxxxFEx25004625355xxx
-427	4.750	5.500	xxxxFEx25004750355xxx
-428	4.875	5.625	xxxxFEx25004875355xxx
-429	5.000	5.750	xxxxFEx25005000355xxx
-430	5.125	5.875	xxxxFEx25005125355xxx
-431	5.250	6.000	xxxxFEx25005250355xxx
-432	5.375	6.125	xxxxFEx25005375355xxx
-433	5.500	6.250	xxxxFEx25005500355xxx
-434	5.625	6.375	xxxxFEx25005625355xxx
-435	5.750	6.500	xxxxFEx25005750355xxx
-436	5.875	6.625	xxxxFEx25005875355xxx
-437	6.000	6.750	xxxxFEx25006000355xxx
-438	6.250	7.000	xxxxFEx25006250355xxx
-439	6.500	7.250	xxxxFEx25006500355xxx
-440	6.750	7.500	xxxxFEx25006750355xxx
-441	7.000	7.750	xxxxFEx25007000355xxx
-442	7.250	8.000	xxxxFEx25007250355xxx
-443	7.500	8.250	xxxxFEx25007500355xxx
-444	7.750	8.500	xxxxFEx25007750355xxx

Dash #	A Gland ID	B Min. Gland OD	Part Number
-445	8.000	8.750	xxxxFEx25008000355xxx
-446	8.500	9.250	xxxxFEx25008500355xxx
-447	9.000	9.750	xxxxFEx25009000355xxx
-448	9.500	10.250	xxxxFEx25009500355xxx
-449	10.000	10.750	xxxxFEx25010000355xxx
-450	10.500	11.250	xxxxFEx25010500355xxx
-451	11.000	11.750	xxxxFEx25011000355xxx
-452	11.500	12.250	xxxxFEx25011500355xxx
-453	12.000	12.750	xxxxFEx25012000355xxx
-454	12.500	13.250	xxxxFEx25012500355xxx
-455	13.000	13.750	xxxxFEx25013000355xxx
-456	13.500	14.250	xxxxFEx25013500355xxx
-457	14.000	14.750	xxxxFEx25014000355xxx
-458	14.500	15.250	xxxxFEx25014500355xxx
-459	15.000	15.750	xxxxFEx25015000355xxx
-460	15.500	16.250	xxxxFEx25015500355xxx
-461	16.000	16.750	xxxxFEx25016000355xxx
-462	16.500	17.250	xxxxFEx25016500355xxx
-463	17.000	17.750	xxxxFEx25017000355xxx
-464	17.500	18.250	xxxxFEx25017500355xxx
-465	18.000	18.750	xxxxFEx25018000355xxx
-466	18.500	19.250	xxxxFEx25018500355xxx
-467	19.000	19.750	xxxxFEx25019000355xxx
-468	19.500	20.250	xxxxFEx25019500355xxx

02/15/08

Parker Hannifin Corporation
EPS Division
Tel: (801) 972-3000
Fax: (801) 973-4019

Internal Pressure Face Seal

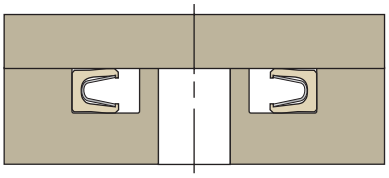

Internal Pressure

FI Profiles

FI FlexiSeal Internal Pressure Face Seals are designed so that the spring cavity faces in.

Design Considerations

- Hardware Configurations/Installation, see **Page 2-3**
- Surface Finish and Hardness, see **Page 2-9**
- Extrusion Gaps and High Pressure, see **Page 2-10**
- Spring Choices, see **Page 2-12**
- Lip Shapes, see **Page 2-16**
- Face Seal Gland Considerations, see **Page 6-2**
- Shaft Misalignment Issues, see **Page 2-19**

Part Number Example

Table 6-5. FI Internal Pressure Part Number

0	3	0	1	FI	N	1	2	5	0	1	2	5	0	1	7	0	S	H
				Internal Face Seal	Default Lip Style													Helical Spring

Parker Hannifin Corporation
EPS Division
Tel: (801) 972-3000
Fax: (801) 973-4019

Gland Dimensions — FI Profiles

Table 6-6. FI Internal Pressure Gland Dimensions

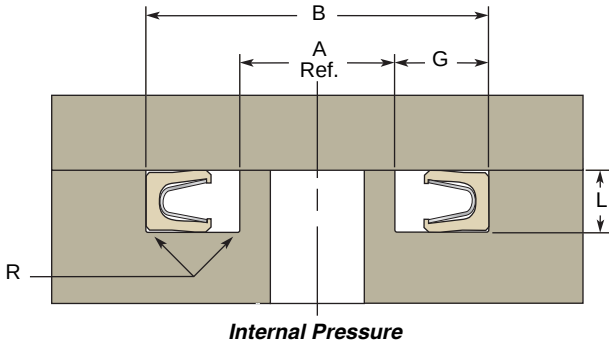

Internal Pressure

Each of these FlexiSeal profiles were designed to fit into either the Inch/Fractional internal pressure face seal glands on the following pages or the Metric glands on **Page 6-20**.

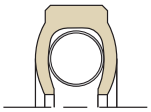

FIN-H

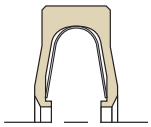

FIC-V

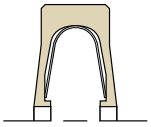

FID-V

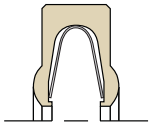

FIK-V

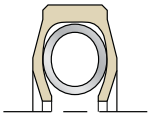

FIN-C

Dash #	A Max. Gland ID	B Gland OD	Part Number
R = 0.007" max. radius L = 0.061/0.063" G = 0.094" minimum			
		+.005/ -.000	
-012	0.312	0.500	**xxxxFIx06200312083xxx**
-013	0.375	0.562	**xxxxFIx06200375083xxx**
-014	0.437	0.625	**xxxxFIx06200437083xxx**
-015	0.500	0.687	**xxxxFIx06200500083xxx**
-016	0.562	0.750	**xxxxFIx06200562083xxx**
-017	0.625	0.812	**xxxxFIx06200625083xxx**
-018	0.687	0.875	**xxxxFIx06200687083xxx**
-019	0.750	0.937	**xxxxFIx06200750083xxx**
-020	0.812	1.000	**xxxxFIx06200812083xxx**
-021	0.875	1.062	**xxxxFIx06200875083xxx**
-022	0.937	1.125	**xxxxFIx06200937083xxx**
-023	1.000	1.187	**xxxxFIx06201000083xxx**
-024	1.062	1.250	**xxxxFIx06201062083xxx**
-025	1.125	1.312	**xxxxFIx06201125083xxx**
-026	1.187	1.375	**xxxxFIx06201187083xxx**
-027	1.250	1.437	**xxxxFIx06201250083xxx**
-028	1.312	1.500	**xxxxFIx06201312083xxx**
-029	1.437	1.625	**xxxxFIx06201437083xxx**
-030	1.562	1.750	**xxxxFIx06201562083xxx**
-031	1.687	1.875	**xxxxFIx06201687083xxx**
-032	1.812	2.000	**xxxxFIx06201812083xxx**
-033	1.937	2.125	**xxxxFIx06201937083xxx**
-034	2.062	2.250	**xxxxFIx06202062083xxx**
-035	2.187	2.375	**xxxxFIx06202187083xxx**
-036	2.312	2.500	**xxxxFIx06202312083xxx**
-037	2.437	2.625	**xxxxFIx06202437083xxx**
-038	2.562	2.750	**xxxxFIx06202562083xxx**
-039	2.687	2.875	**xxxxFIx06202687083xxx**
-040	2.812	3.000	**xxxxFIx06202812083xxx**
-041	2.937	3.125	**xxxxFIx06202937083xxx**

02/15/08

Parker Hannifin Corporation
EPS Division
Tel: (801) 972-3000
Fax: (801) 973-4019

Table 6-6. FI Internal Pressure Gland Dimensions (Continued)

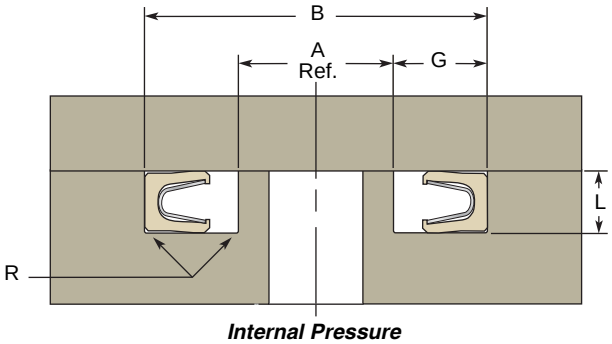

Internal Pressure

Dash #	A Max. Gland ID	B Gland OD	Part Number
R = 0.007" max. radius L = 0.061/0.063" G = 0.094" minimum			
		+.005/ -.000	
-042	3.187	3.375	**xxxxFIx06203187083xxx**
-043	3.437	3.625	**xxxxFIx06203437083xxx**
-044	3.687	3.875	**xxxxFIx06203687083xxx**
-045	3.937	4.125	**xxxxFIx06203937083xxx**
R = 0.010" max. radius L = 0.092/0.094" G = 0.141" minimum			
		+.005/ -.000	
-112	0.405	0.687	**xxxxFIx09300405130xxx**
-113	0.468	0.750	**xxxxFIx09300468130xxx**
-114	0.530	0.812	**xxxxFIx09300530130xxx**
-115	0.593	0.875	**xxxxFIx09300593130xxx**
-116	0.655	0.937	**xxxxFIx09300655130xxx**
-117	0.718	1.000	**xxxxFIx09300718130xxx**
-118	0.780	1.062	**xxxxFIx09300780130xxx**
-119	0.843	1.125	**xxxxFIx09300843130xxx**
-120	0.905	1.187	**xxxxFIx09300905130xxx**
-121	0.968	1.250	**xxxxFIx09300968130xxx**
-122	1.030	1.312	**xxxxFIx09301030130xxx**
-123	1.093	1.375	**xxxxFIx09301093130xxx**
-124	1.155	1.437	**xxxxFIx09301155130xxx**
-125	1.218	1.500	**xxxxFIx09301218130xxx**
-126	1.280	1.562	**xxxxFIx09301280130xxx**
-127	1.343	1.625	**xxxxFIx09301343130xxx**
-128	1.405	1.687	**xxxxFIx09301405130xxx**
-129	1.468	1.750	**xxxxFIx09301468130xxx**
-130	1.530	1.812	**xxxxFIx09301530130xxx**
-131	1.593	1.875	**xxxxFIx09301593130xxx**
-132	1.655	1.937	**xxxxFIx09301655130xxx**
-133	1.718	2.000	**xxxxFIx09301718130xxx**
-134	1.780	2.062	**xxxxFIx09301780130xxx**
-135	1.843	2.125	**xxxxFIx09301843130xxx**

Dash #	A Max. Gland ID	B Gland OD	Part Number
-136	1.905	2.187	**xxxxFIx09301905130xxx**
-137	1.968	2.250	**xxxxFIx09301968130xxx**
-138	2.030	2.312	**xxxxFIx09302030130xxx**
-139	2.093	2.375	**xxxxFIx09302093130xxx**
-140	2.155	2.437	**xxxxFIx09302155130xxx**
-141	2.218	2.500	**xxxxFIx09302218130xxx**
-142	2.280	2.562	**xxxxFIx09302280130xxx**
-143	2.343	2.625	**xxxxFIx09302343130xxx**
-144	2.405	2.687	**xxxxFIx09302405130xxx**
-145	2.468	2.750	**xxxxFIx09302468130xxx**
-146	2.530	2.812	**xxxxFIx09302530130xxx**
-147	2.593	2.875	**xxxxFIx09302593130xxx**
-148	2.655	2.937	**xxxxFIx09302655130xxx**
-149	2.718	3.000	**xxxxFIx09302718130xxx**
-150	2.780	3.062	**xxxxFIx09302780130xxx**
-151	2.905	3.187	**xxxxFIx09302905130xxx**
-152	3.155	3.437	**xxxxFIx09303155130xxx**
-153	3.405	3.687	**xxxxFIx09303405130xxx**
-154	3.655	3.937	**xxxxFIx09303655130xxx**
-155	3.905	4.187	**xxxxFIx09303905130xxx**
-156	4.155	4.437	**xxxxFIx09304155130xxx**
-157	4.405	4.687	**xxxxFIx09304405130xxx**
-158	4.655	4.937	**xxxxFIx09304655130xxx**
-159	4.905	5.187	**xxxxFIx09304905130xxx**
-160	5.155	5.437	**xxxxFIx09305155130xxx**
-161	5.405	5.687	**xxxxFIx09305405130xxx**
-162	5.655	5.937	**xxxxFIx09305655130xxx**
-163	5.905	6.187	**xxxxFIx09305905130xxx**
-164	6.155	6.437	**xxxxFIx09306155130xxx**
-165	6.405	6.687	**xxxxFIx09306405130xxx**
-166	6.655	6.937	**xxxxFIx09306655130xxx**
-167	6.905	7.187	**xxxxFIx09306905130xxx**

02/15/08

Parker Hannifin Corporation
EPS Division
Tel: (801) 972-3000
Fax: (801) 973-4019

Table 6-6. FI Internal Pressure Gland Dimensions (Continued)

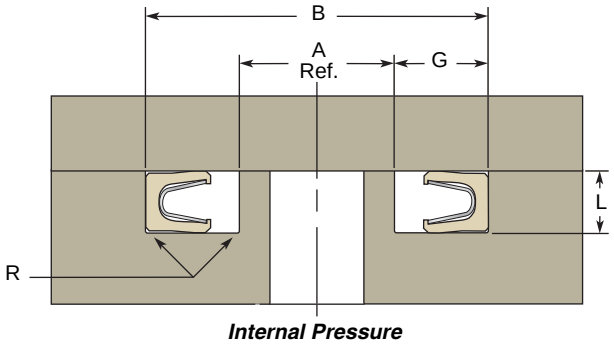

Internal Pressure

R = 0.010" max. radius
L = 0.124/0.126"
G = 0.188" minimum

Dash #	A Max. Gland ID	B Gland OD	Part Number
		+.005/ -.000	
-210	0.625	1.000	xxxxFIx12500625170xxx
-211	0.687	1.062	xxxxFIx12500687170xxx
-212	0.750	1.125	xxxxFIx12500750170xxx
-213	0.812	1.187	xxxxFIx12500812170xxx
-214	0.875	1.250	xxxxFIx12500875170xxx
-215	0.937	1.312	xxxxFIx12500937170xxx
-216	1.000	1.375	xxxxFIx12501000170xxx
-217	1.062	1.437	xxxxFIx12501062170xxx
-218	1.125	1.500	xxxxFIx12501125170xxx
-219	1.187	1.562	xxxxFIx12501187170xxx
-220	1.250	1.625	xxxxFIx12501250170xxx
-221	1.312	1.687	xxxxFIx12501312170xxx
-222	1.375	1.750	xxxxFIx12501375170xxx
-223	1.500	1.875	xxxxFIx12501500170xxx
-224	1.625	2.000	xxxxFIx12501625170xxx
-225	1.750	2.125	xxxxFIx12501750170xxx
-226	1.875	2.250	xxxxFIx12501875170xxx
-227	2.000	2.375	xxxxFIx12502000170xxx
-228	2.125	2.500	xxxxFIx12502125170xxx
-229	2.250	2.625	xxxxFIx12502250170xxx
-230	2.375	2.750	xxxxFIx12502375170xxx
-231	2.500	2.875	xxxxFIx12502500170xxx
-232	2.625	3.000	xxxxFIx12502625170xxx
-233	2.750	3.125	xxxxFIx12502750170xxx
-234	2.875	3.250	xxxxFIx12502875170xxx
-235	3.000	3.375	xxxxFIx12503000170xxx
-236	3.125	3.500	xxxxFIx12503125170xxx
-237	3.250	3.625	xxxxFIx12503250170xxx
-238	3.375	3.750	xxxxFIx12503375170xxx
-239	3.500	3.875	xxxxFIx12503500170xxx
-240	3.625	4.000	xxxxFIx12503625170xxx
-241	3.750	4.125	xxxxFIx12503750170xxx
-242	3.875	4.250	xxxxFIx12503875170xxx
-243	4.000	4.375	xxxxFIx12504000170xxx

Dash #	A Max. Gland ID	B Gland OD	Part Number
-244	4.125	4.500	xxxxFIx12504125170xxx
-245	4.250	4.625	xxxxFIx12504250170xxx
-246	4.375	4.750	xxxxFIx12504375170xxx
-247	4.500	4.875	xxxxFIx12504500170xxx
-248	4.625	5.000	xxxxFIx12504625170xxx
-249	4.750	5.125	xxxxFIx12504750170xxx
-250	4.875	5.250	xxxxFIx12504875170xxx
-251	5.000	5.375	xxxxFIx12505000170xxx
-252	5.125	5.500	xxxxFIx12505125170xxx
-253	5.250	5.625	xxxxFIx12505250170xxx
-254	5.375	5.750	xxxxFIx12505375170xxx
-255	5.500	5.875	xxxxFIx12505500170xxx
-256	5.625	6.000	xxxxFIx12505625170xxx
-257	5.750	6.125	xxxxFIx12505750170xxx
-258	5.875	6.250	xxxxFIx12505875170xxx
-259	6.125	6.500	xxxxFIx12506125170xxx
-260	6.375	6.750	xxxxFIx12506375170xxx
-261	6.625	7.000	xxxxFIx12506625170xxx
-262	6.875	7.250	xxxxFIx12506875170xxx
-263	7.125	7.500	xxxxFIx12507125170xxx
-264	7.375	7.750	xxxxFIx12507375170xxx
-265	7.625	8.000	xxxxFIx12507625170xxx
-266	7.875	8.250	xxxxFIx12507875170xxx
-267	8.125	8.500	xxxxFIx12508125170xxx
-268	8.375	8.750	xxxxFIx12508375170xxx
-269	8.625	9.000	xxxxFIx12508625170xxx
-270	8.875	9.250	xxxxFIx12508875170xxx
-271	9.125	9.500	xxxxFIx12509125170xxx
-272	9.375	9.750	xxxxFIx12509375170xxx
-273	9.625	10.000	xxxxFIx12509625170xxx
-274	9.875	10.250	xxxxFIx12509875170xxx
-275	10.375	10.750	xxxxFIx12510375170xxx
-276	10.875	11.250	xxxxFIx12510875170xxx
-277	11.375	11.750	xxxxFIx12511375170xxx
-278	11.875	12.250	xxxxFIx12511875170xxx
-279	12.375	12.750	xxxxFIx12512375170xxx
-280	12.875	13.250	xxxxFIx12512875170xxx
-281	13.375	13.750	xxxxFIx12513375170xxx

02/15/08

Parker Hannifin Corporation
EPS Division
Tel: (801) 972-3000
Fax: (801) 973-4019

Table 6-6. FI Internal Pressure Gland Dimensions (Continued)

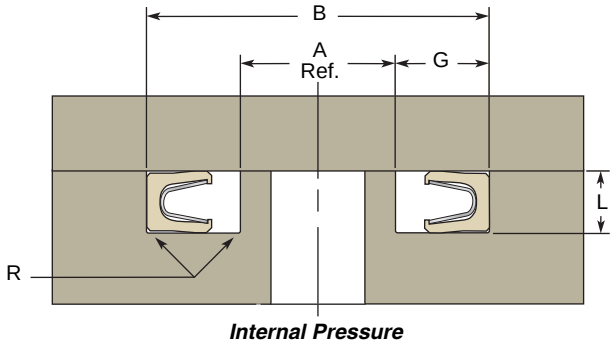

Internal Pressure

R = 0.015" max. radius
L = 0.186/0.188"
G = 0.281" minimum

Dash #	A Max. Gland ID	B Gland OD	Part Number
		+.005/ -.000	
-325	1.312	1.875	xxxxFIx18701312260xxx
-326	1.437	2.000	xxxxFIx18701437260xxx
-327	1.562	2.125	xxxxFIx18701562260xxx
-328	1.687	2.250	xxxxFIx18701687260xxx
-329	1.812	2.375	xxxxFIx18701812260xxx
-330	1.937	2.500	xxxxFIx18701937260xxx
-331	2.062	2.625	xxxxFIx18702062260xxx
-332	2.187	2.750	xxxxFIx18702187260xxx
-333	2.312	2.875	xxxxFIx18702312260xxx
-334	2.437	3.000	xxxxFIx18702437260xxx
-335	2.562	3.125	xxxxFIx18702562260xxx
-336	2.687	3.250	xxxxFIx18702687260xxx
-337	2.812	3.375	xxxxFIx18702812260xxx
-338	2.937	3.500	xxxxFIx18702937260xxx
-339	3.062	3.625	xxxxFIx18703062260xxx
-340	3.187	3.750	xxxxFIx18703187260xxx
-341	3.312	3.875	xxxxFIx18703312260xxx
-342	3.437	4.000	xxxxFIx18703437260xxx
-343	3.562	4.125	xxxxFIx18703562260xxx
-344	3.687	4.250	xxxxFIx18703687260xxx
-345	3.812	4.375	xxxxFIx18703812260xxx
-346	3.937	4.500	xxxxFIx18703937260xxx
-347	4.062	4.625	xxxxFIx18704062260xxx
-348	4.187	4.750	xxxxFIx18704187260xxx
-349	4.312	4.875	xxxxFIx18704312260xxx
-350	4.437	5.000	xxxxFIx18704437260xxx
-351	4.562	5.125	xxxxFIx18704562260xxx
-352	4.687	5.250	xxxxFIx18704687260xxx
-353	4.812	5.375	xxxxFIx18704812260xxx
-354	4.937	5.500	xxxxFIx18704937260xxx
-355	5.062	5.625	xxxxFIx18705062260xxx
-356	5.187	5.750	xxxxFIx18705187260xxx

Dash #	A Max. Gland ID	B Gland OD	Part Number
-357	5.312	5.875	xxxxFIx18705312260xxx
-358	5.437	6.000	xxxxFIx18705437260xxx
-359	5.562	6.125	xxxxFIx18705562260xxx
-360	5.687	6.250	xxxxFIx18705687260xxx
-361	5.812	6.375	xxxxFIx18705812260xxx
-362	6.062	6.625	xxxxFIx18706062260xxx
-363	6.312	6.875	xxxxFIx18706312260xxx
-364	6.562	7.125	xxxxFIx18706562260xxx
-365	6.812	7.375	xxxxFIx18706812260xxx
-366	7.062	7.625	xxxxFIx18707062260xxx
-367	7.312	7.875	xxxxFIx18707312260xxx
-368	7.562	8.125	xxxxFIx18707562260xxx
-369	7.812	8.375	xxxxFIx18707812260xxx
-370	8.062	8.625	xxxxFIx18708062260xxx
-371	8.312	8.875	xxxxFIx18708312260xxx
-372	8.562	9.125	xxxxFIx18708562260xxx
-373	8.812	9.375	xxxxFIx18708812260xxx
-374	9.062	9.625	xxxxFIx18709062260xxx
-375	9.312	9.875	xxxxFIx18709312260xxx
-376	9.562	10.125	xxxxFIx18709562260xxx
-377	9.812	10.375	xxxxFIx18709812260xxx
-378	10.312	10.875	xxxxFIx18710312260xxx
-379	10.812	11.375	xxxxFIx18710812260xxx
-380	11.312	11.875	xxxxFIx18711312260xxx
-381	11.812	12.375	xxxxFIx18711812260xxx
-382	12.812	13.375	xxxxFIx18712812260xxx
-383	13.812	14.375	xxxxFIx18713812260xxx
-384	14.812	15.375	xxxxFIx18714812260xxx
-385	15.812	16.375	xxxxFIx18715812260xxx
-386	16.812	17.375	xxxxFIx18716812260xxx
-387	17.812	18.375	xxxxFIx18717812260xxx
-388	18.812	19.375	xxxxFIx18718812260xxx
-389	19.812	20.375	xxxxFIx18719812260xxx
-390	20.812	21.375	xxxxFIx18720812260xxx

Parker Hannifin Corporation
EPS Division
Tel: (801) 972-3000
Fax: (801) 973-4019

Table 6-6. FI Internal Pressure Gland Dimensions (Continued)

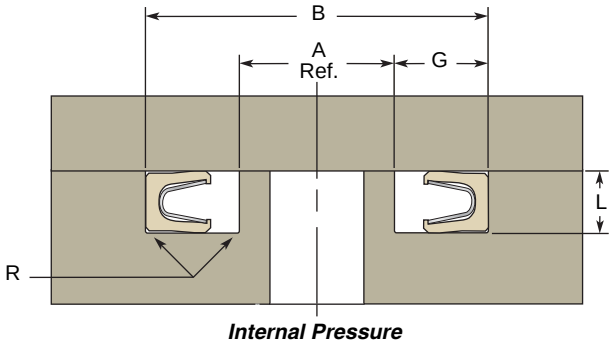

Internal Pressure

R = 0.015" max. radius
L = 0.249/0.251"
G = 0.375" minimum

Dash #	A Max. Gland ID	B Gland OD +.005/ -.000	Part Number
-425	4.250	5.000	**xxxxFIx25004250355xxx**
-426	4.375	5.125	**xxxxFIx25004375355xxx**
-427	4.500	5.250	**xxxxFIx25004500355xxx**
-428	4.625	5.375	**xxxxFIx25004625355xxx**
-429	4.750	5.500	**xxxxFIx25004750355xxx**
-430	4.875	5.625	**xxxxFIx25004875355xxx**
-431	5.000	5.750	**xxxxFIx25005000355xxx**
-432	5.125	5.875	**xxxxFIx25005125355xxx**
-433	5.250	6.000	**xxxxFIx25005250355xxx**
-434	5.375	6.125	**xxxxFIx25005375355xxx**
-435	5.500	6.250	**xxxxFIx25005500355xxx**
-436	5.625	6.375	**xxxxFIx25005625355xxx**
-437	5.750	6.500	**xxxxFIx25005750355xxx**
-438	6.000	6.750	**xxxxFIx25006000355xxx**
-439	6.250	7.000	**xxxxFIx25006250355xxx**
-440	6.500	7.250	**xxxxFIx25006500355xxx**
-441	6.750	7.500	**xxxxFIx25006750355xxx**
-442	7.000	7.750	**xxxxFIx25007000355xxx**
-443	7.250	8.000	**xxxxFIx25007250355xxx**
-444	7.500	8.250	**xxxxFIx25007500355xxx**
-445	7.750	8.500	**xxxxFIx25007750355xxx**
-446	8.250	9.000	**xxxxFIx25008250355xxx**
-447	8.750	9.500	**xxxxFIx25008750355xxx**
-448	9.250	10.000	**xxxxFIx25009250355xxx**
-449	9.750	10.500	**xxxxFIx25009750355xxx**
-450	10.250	11.000	**xxxxFIx25010250355xxx**
-451	10.750	11.500	**xxxxFIx25010750355xxx**
-452	11.250	12.000	**xxxxFIx25011250355xxx**
-453	11.750	12.500	**xxxxFIx25011750355xxx**
-454	12.250	13.000	**xxxxFIx25012250355xxx**
-455	12.750	13.500	**xxxxFIx25012750355xxx**
-456	13.250	14.000	**xxxxFIx25013250355xxx**
-457	13.750	14.500	**xxxxFIx25013750355xxx**
-458	14.250	15.000	**xxxxFIx25014250355xxx**
-459	14.750	15.500	**xxxxFIx25014750355xxx**
-460	15.250	16.000	**xxxxFIx25015250355xxx**
-461	15.750	16.500	**xxxxFIx25015750355xxx**
-462	16.250	17.000	**xxxxFIx25016250355xxx**
-463	16.750	17.500	**xxxxFIx25016750355xxx**
-464	17.250	18.000	**xxxxFIx25017250355xxx**
-465	17.750	18.500	**xxxxFIx25017750355xxx**
-466	18.250	19.000	**xxxxFIx25018250355xxx**
-467	18.750	19.500	**xxxxFIx25018750355xxx**
-468	19.250	20.000	**xxxxFIx25019250355xxx**

02/15/08

Parker Hannifin Corporation
EPS Division
Tel: (801) 972-3000
Fax: (801) 973-4019

FlexiSeal Face Seals

FE & FI Metric Profiles

FE FlexiSeal External Pressure Face Seals are designed so that the spring cavity faces out. FI FlexiSeal Internal Pressure Face Seals are designed so that the spring cavity faces in. FE & FI profiles are available in the Metric sizes on **Page 6-21**.

Design Considerations

- Hardware Configurations/Installation, see **Page 2-3**
- Surface Finish and Hardness, see **Page 2-9**
- Extrusion Gaps and High Pressure, see **Page 2-10**
- Spring Choices, see **Page 2-12**
- Lip Shapes, see **Page 2-16**
- Face Seal Gland Considerations, see **Page 6-2**
- Shaft Misalignment Issues, see **Page 2-19**

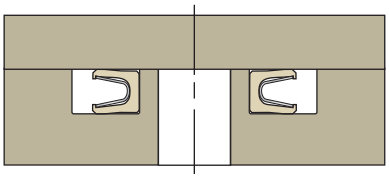

External Pressure

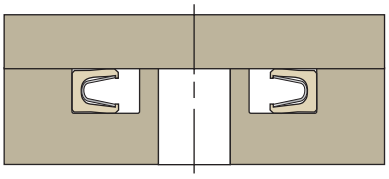

Internal Pressure

Part Number Example

Table 6-7. Metric Face Seal Part Number

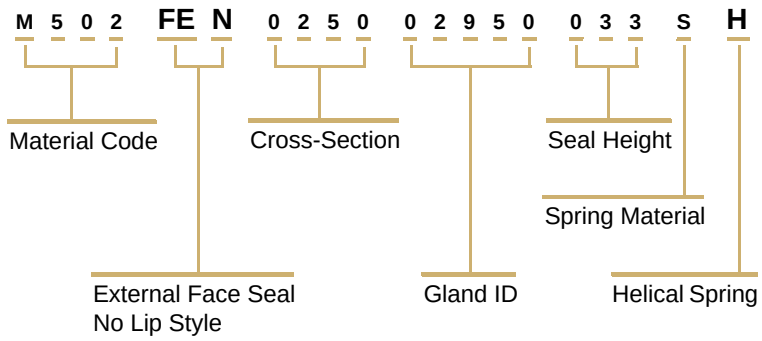

Parker Hannifin Corporation
EPS Division
Tel: (801) 972-3000
Fax: (801) 973-4019

Gland Dimensions — FE & FI Profiles

Table 6-8. FE & FI Metric Gland Dimensions

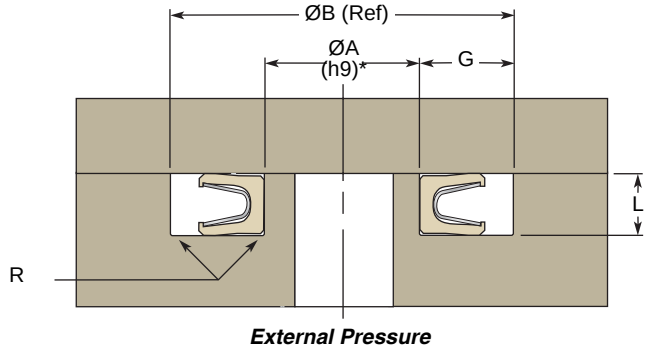

External Pressure

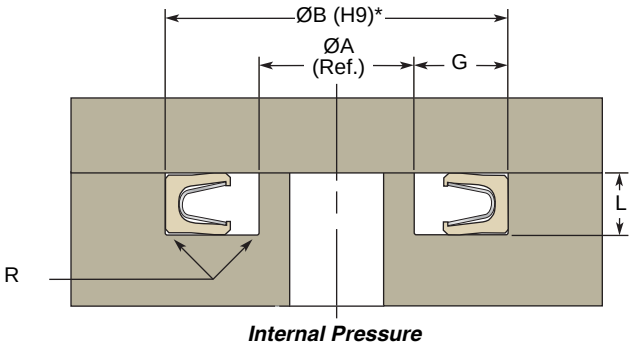

Internal Pressure

Each of these FlexiSeal profiles were designed to fit into the metric glands on this page.

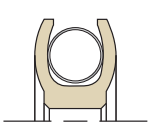

FEN-H

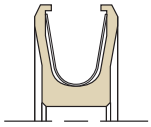

FEC-V

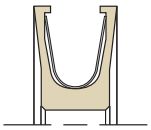

FED-V

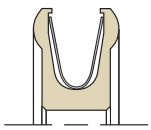

FEK-V

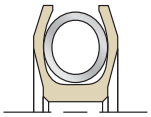

FEN-C

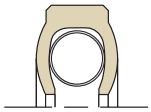

FIN-H

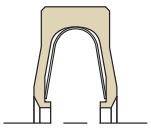

FIC-V

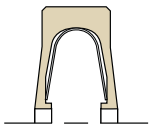

FID-V

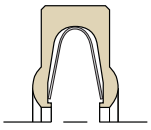

FIK-V

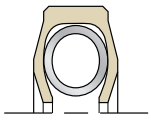

FIN-C

Cross-Section Callout	Gland Cross-Section	Heel Height Callout	Min. Groove Width (G)	Max Radius (R)
0200	2.00/2.05 mm	021	2.39 mm	0.18 mm
0250	2.50/2.55 mm	033	3.58 mm	0.25 mm
0400	4.00/4.05 mm	043	4.78 mm	0.25 mm
0500	5.00/5.05 mm	066	7.14 mm	0.38 mm
0700	7.00/7.08 mm	090	9.53 mm	0.38 mm

* For ISO Tolerances see **Appendix D**.

Example Part Numbers

Part Number	Groove ID (A) in mm	Groove OD (B) in mm	Groove Depth (L) in mm	Groove Width (G) in mm
FED-V Profile				
M601FED025002450033EVM	24.50 +.00/-.05	31.66 min.	2.50/2.55	3.58 min.
FIN-C Profile				
M301FIN050025500066HCH	255.00 max.	269.28 +.13/-.00	5.00/5.05	7.14 min.

6

02/15/08

Parker Hannifin Corporation
EPS Division
Tel: (801) 972-3000
Fax: (801) 973-4019

Notes

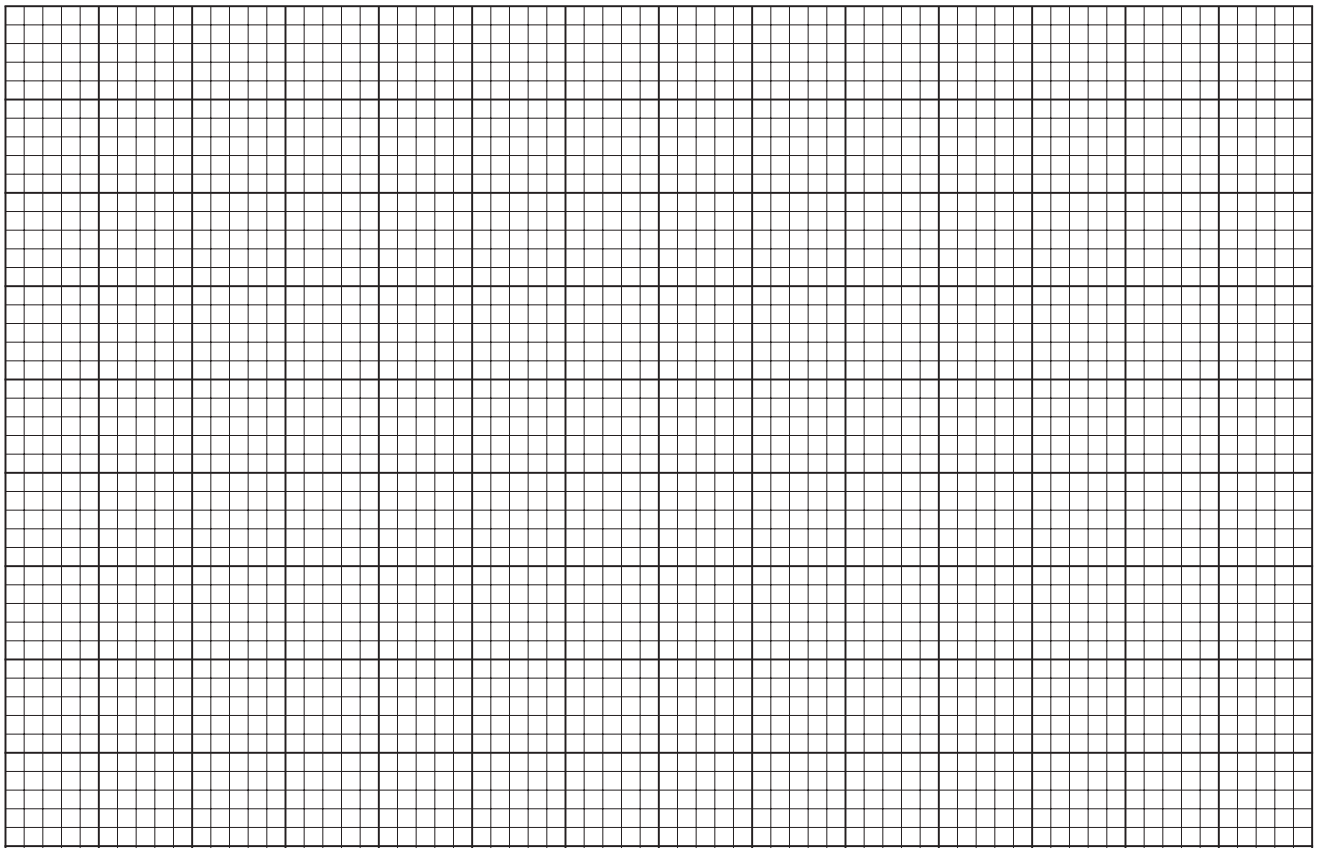

Parker Hannifin Corporation
EPS Division
Tel: (801) 972-3000
Fax: (801) 973-4019

www.parker.com/eps

FlexiSeal® Rotary Seals
Introduction

Contents

Engineering 7-2
Materials 7-4
Product Offering 7-5
FlexiSeal Rotary
- FC and FH Profiles — Inch/Fractional 7-9
- FC and FH Profiles — Metric 7-16
- FF Profiles — Flanged Inch/Fractional 7-18
- FF Profiles — Flanged Metric 7-26

Rotary FlexiSeal

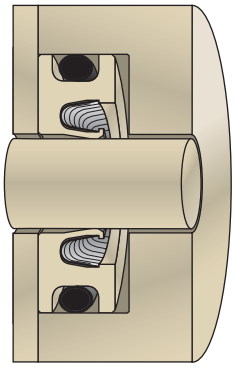

Rotary Application

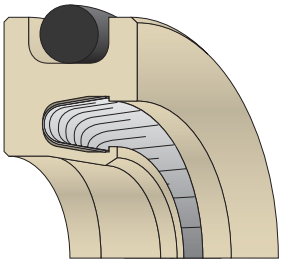

Chamfered ID, O-Ring OD Rotary FlexiSeal

Rotary FlexiSeal is the answer for many radial applications.

The Rotary FlexiSeal should be used when speeds are relatively low (<1000 sfpm) and pressures are high (up to 10,000 psi). FlexiLip™ and FlexiCase™ profiles should be used when pressures are low and speeds high. Rotary FlexiSeals feature either a flanged design or an O-ring on the OD to keep the seal fixed in the bore as the shaft rotates. The O-ring can either be centered along the OD or be located in the heel of the seal. Virtually any O-ring material can be supplied with a custom rotary FlexiSeal, but a fluorocarbon material is standard.

Applications

Radial applications with extreme conditions that involve lower speeds and higher pressures, for which the Rotary FlexiSeal is best suited, include:

- Compressors
- Cryogenics
- FDA Clean Grade
- Jet Engines
- Hydraulic Cylinders
- Pressure Washers
- Robotics
- Rotary Unions
- Steering Cylinders
- Swivels
- Vapor Recovery Systems
- Many more

Markets

Since the FlexiSeal solves problems along several parameters, it can be found in virtually every market including:

- Aerospace
- Automotive
- Chemical Process
- Appliances
- Electronic
- Food & Beverage
- Heavy Machinery
- Hydraulic
- Machine Tools
- Marine
- Medical
- Military
- Oil & Gas
- Pharmaceutical
- Semiconductor

01/15/06

Parker Hannifin Corporation
EPS Division
Tel: (801) 972-3000
Fax: (801) 973-4019
www.parker.com/eps

Choosing the Right Design

While choosing the right Rotary FlexiSeal for your application, you need to consider:

- Pressure
- Shaft Velocity
- Lubrication
- Shaft Misalignment
- Shaft Runout
- Shaft Hardness
- Shaft Surface Finish
- Different Spring Choices
- Lip Shapes
- Shaft Lead

Pressure and Shaft Velocity

Unlike reciprocating applications, seals ride on a rotating shaft in only one small area where dynamic forces and energy are concentrated. For a guide to aid in the choice of seal profile and material for optimum seal life, see **Page 2-17**.

Lubrication

While FlexiSeals made of PTFE have a natural lubricity and can be used in unlubricated applications, a film of lubricant between the seal lip and the shaft reduces seal wear and frictional heat generation, makes higher surface speeds possible, and helps prevent the seal from wearing a groove in the shaft.

Shaft Misalignment and Runout

Applications with rotating shafts may develop problems associated with shaft misalignment. Because rotary FlexiSeals are spring-loaded, they normally handle runout and eccentricity better than FlexiLip and FlexiCase seals. For more information about problems with eccentricity and runout, see **Page 2-19**.

Shaft Hardness and Surface Finish

It is critical to match the right surface roughness with the media being sealed, especially when the surface is hardened and the original finish will take some time to break in. See **Table 7-1** for recommendations and **Pages 2-9** and **2-10** for a more general discussion on the topic.

Table 7-1. Surface Roughness, R_a

Media Being Sealed	Dynamic Surfaces		Static Surfaces	
	µ inch	µ m	µ inch	µ m
Cryogenics	6 max.	0.15 max.	8 max.	0.2 max.
Helium Gas Hydrogen Gas Freon	8 max.	0.2 max.	12 max.	0.3 max.
Air Nitrogen Gas Argon Natural Gas Fuel (Aircraft and Automotive)	12 max.	0.3 max.	16 max.	0.4 max.
Water Hydraulic Oil Crude Oil Sealants	12 max.	0.3 max.	32 max.	0.8 max.

Spring Choices

Rotary FlexiSeals are available with two different spring designs to energize the jacket: V-shaped cantilever springs (V Series) and canted-coil springs (C Series). The FFN-H flanged design included in this section uses the helical spring (H Series) and should only be used for static or very slow rotary. Details on spring features can be found on **Page 2-12**.

Parker Hannifin Corporation
EPS Division
Tel: (801) 972-3000
Fax: (801) 973-4019

Table 7-2. Recommended Applications for FlexiSeal Rotary Springs

V Series	C Series	H Series
rotary shafts <100 sfpm	rotary shafts <1000 sfpm	flanged rotary seals
wide tolerance and misaligned glands	wide tolerance and misaligned glands	static or very slow dynamic seals (<50 sfpm)
abrasive media (when scraper lip is designated)	friction critical and very small diameter applications	when sealability is critical
dynamic applications to 450 °F	dynamic applications to 450 °F	applications below -100 °F

Lip Shapes

Rotary FlexiSeal profiles can be optimized by changing their lip shapes. Chamfered lips maximize sealability while minimizing friction. Scraper lips prevent particles from accumulating at the lip, which makes wash-downs more effective.

Shaft Machine Lead

To avoid pumping fluid under the seal lip, the lead from machining needs to be kept to less than 0.05 degrees. More on machine lead on **Page 2-20**.

Parker Hannifin Corporation
EPS Division
Tel: (801) 972-3000
Fax: (801) 973-4019

Common Materials Used in this Product

The most popular PTFE fillers used for FlexiSeal Rotary products are carbon fiber, graphite, Ryton®*/carbon and Ryton/carbon/TFM. PTFE is also popular for these products without any filler (virgin PTFE).

A number of other fillers are used in combination with PTFE, and non-PTFE compounds are available. More information on these materials and their properties is available in **Tab 3**. For best results consult the EPS Division PTFE Application Engineering team at (801) 972-3000.

* Ryton is a registered trademark of Chevron Phillips Chemical Company.

0502 — Carbon Fiber Filled

Carbon fiber lowers creep, increases flex and compressive modulus and raises hardness. Coefficient of thermal expansion is lowered and thermal conductivity is higher for compounds of carbon fiber filled PTFE. Ideal for automotive applications in shock absorbers and water pumps.

0602 — Ryton/Carbon Filled

Ryton/Carbon filled PTFE features improved surface lubricity and abrasion resistance. It should be used only on shafts hardened to 60 Rc or more.

0301 — Graphite Filled

Graphite filled PTFE has extremely low coefficient of friction due to the low friction characteristics of graphite. Graphite is chemically inert. Graphite imparts excellent wear properties and high PV to PTFE.

0601 — Aromatic Polyester Filled

Aromatic Polyester offers excellent high temperature capabilities and excellent wear resistance against soft, dynamic surfaces. Aromatic polyester is not recommended for sealing applications involving steam.

0203 — Fiberglass Filled

Glass fiber is the most common filler with a positive impact on creep performance of PTFE. Glass fiber adds wear resistance and offers good compression strength.

Parker Hannifin Corporation
EPS Division
Tel: (801) 972-3000
Fax: (801) 973-4019

Decision Tree

Medium to High Speed Rotary FlexiSeal

The decision trees in this guide are to be used as an engineering guide only. Often several other parameters must be considered to optimize seal design. Contact Parker's PTFE Engineering Team for confirmation of your choice or further recommendations. Parker also recommends that any seal be tested in the application conditions before releasing for production.

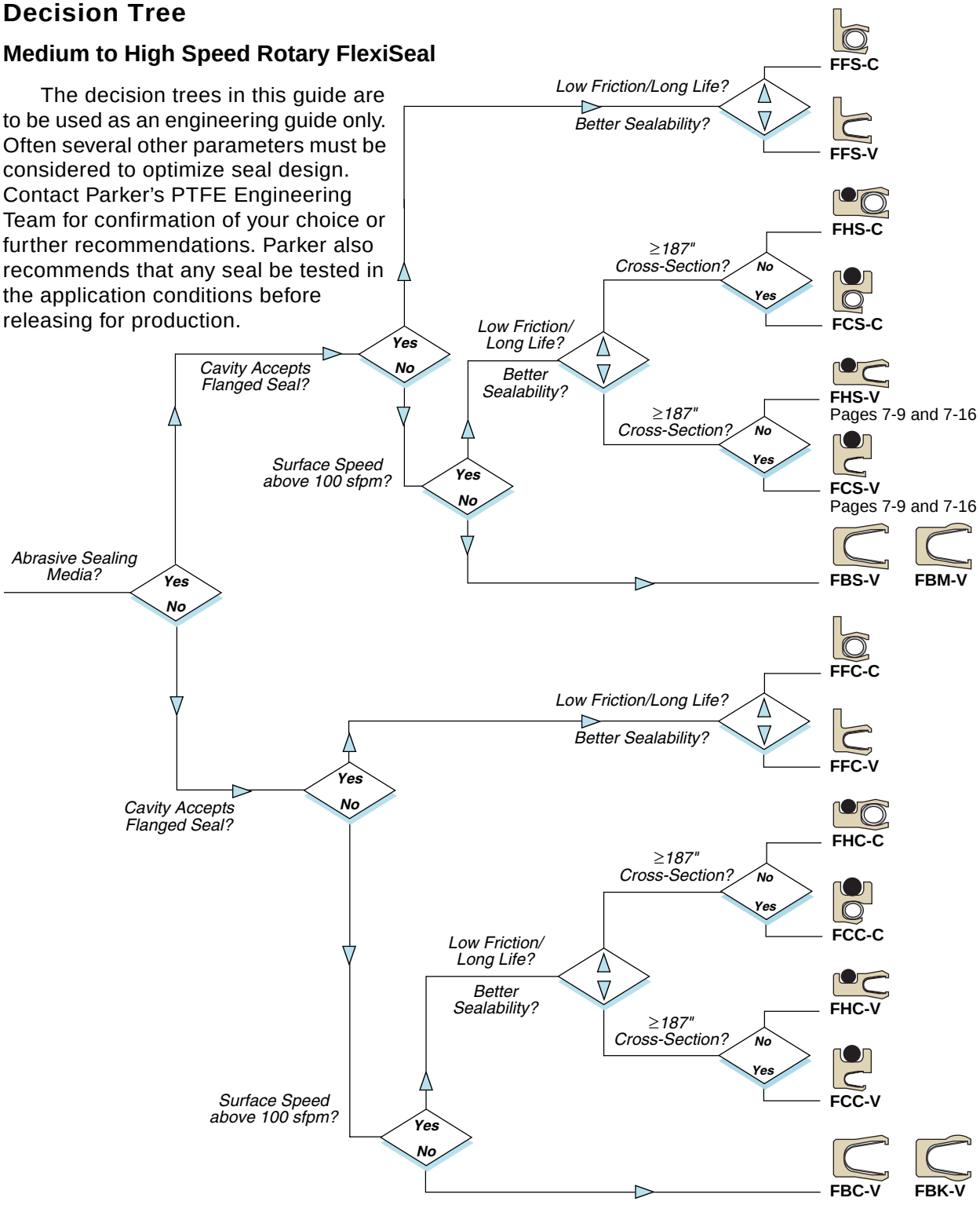

01/15/07

7

Parker Hannifin Corporation
EPS Division
Tel: (801) 972-3000
Fax: (801) 973-4019
www.parker.com/eps

Part Number Nomenclature — FlexiSeal Rotary

Table 7-3. FlexiSeal Rotary Part Number Nomenclature

English

0	5	0	2	FC	S	1	2	5	0	0	5	0	0	1	7	0	S	C	L

4-Digit Material Code
Examples:
0502 = Carbon Fiber Filled PTFE
0602 = Ryton®/Carbon Filled PTFE

FlexiSeal
Gland Type Classification
FC = Rotary Shaft — Centered O-Ring
FH = Rotary Shaft — O-Ring in Heel
FF = Rotary Shaft — Flanged

Lip Style Designation
N = Default/No Lip Style
C = Chamfered ID & OD
S = Scraper ID

Gland Cross-Section
Examples:
062 = 0.062"
093 = 0.093"
125 = 0.125"
187 = 0.187"
250 = 0.250"

Shaft Diameter
Examples:
00500 = 0.500"
02500 = 2.500"
11000 = 11.000"

Seal Height Designation
Examples:
083 = 0.083"
130 = 0.130"
170 = 0.170"
260 = 0.260"
355 = 0.355"

Spring Material
E = ELGILOY
S = Stainless Steel
H = C-276 alloy

Spring Design
V = Cantilever
C = Canted-Coil Spring
H = Helical Spring
W= White silicone filled Cantilever
R = Red silicone filled Cantilever

Spring Load
Blank = No Option (Helical Only)
L = Light
M = Medium
H = Heavy

Metric

M	5	0	2	FC	S	0	7	0	0	1	0	0	0	0	0	9	0	S	C	L

4-Digit Material Code
Examples:
M502 = Carbon Fiber Filled PTFE
M602 = Ryton®/Carbon Filled PTFE
("M" indicates metric)

FlexiSeal
Gland Type Classification
FC = Rotary Shaft — Centered O-Ring
FH = Rotary Shaft — O-Ring in Heel
FF = Rotary Shaft — Flanged

Lip Style Designation
N = Default/No Lip Style
C = Chamfered ID & OD
S = Scraper ID

Gland Cross-Section
Examples:
0200 = 2.00 mm
0250 = 2.50 mm
0400 = 4.00 mm
0500 = 5.00 mm
0700 = 7.00 mm

Shaft Diameter
Examples:
00800 = 8.00 mm
01150 = 11.50 mm
06500 = 65.00 mm

Seal Height Designation
Examples:
021 = 2.1 mm
033 = 3.3 mm
043 = 4.3 mm
066 = 6.6 mm
090 = 9.0 mm

Spring Material
E = ELGILOY
S = Stainless Steel
H = C-276 alloy

Spring Design
V = Cantilever
C = Canted-Coil Spring
H = Helical Spring
W= White silicone filled Cantilever
R = Red silicone filled Cantilever

Spring Load
Blank = No Option (Helical Only)
L = Light
M = Medium
H = Heavy

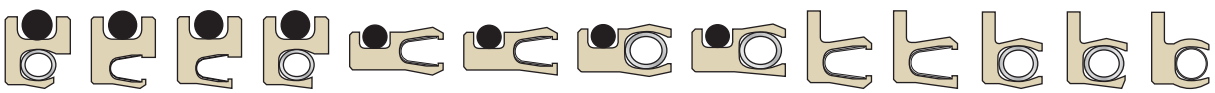

FCC-C *FCC-V* *FCS-V* *FCS-C* *FHC-V* *FHS-V* *FHC-C* *FHS-C* *FFC-V* *FFS-V* *FFC-C* *FFS-C* *FFN-H*

02/15/08

Parker Hannifin Corporation
EPS Division
Tel: (801) 972-3000
Fax: (801) 973-4019
www.parker.com/eps

Profiles

Table 7-4. Product Profiles

Profile	Features	Recommended Applications	Available as Standard in High Pressure Extended Heel (up to 10,000 psi)	Friction Rating	Low Pressure Sealability	Good in Abrasive Media	Max. Rotary Surface Speed (in sfpm)	Gland Dimension Table Location	Available in Mil-G-5514
FCC-V	O-Ring Centered in OD, Chamfered ID, Cantilever Spring	Optimum sealability. Available in 155 cross-section and higher.	Yes	Medium	Very Good	No	1000	**Pages 7-9, 7-16**	No
FCS-V	O-Ring Centered in OD, Scraper ID, Cantilever Spring	Minimizes contamination threat. Available in 155 cross-section and higher.	Yes	Medium	Very Good	Yes	1000	**Pages 7-9, 7-16**	No
FCC-C 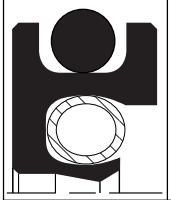	O-Ring Centered in OD, Chamfered ID, Canted-Coil Spring	Reduced friction and sealability. Available in 155 cross-section and higher.	Yes	Very Low	Good	No	1000	**Pages 7-9, 7-16**	No
FCS-C 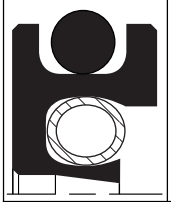	O-Ring Centered in OD, Scraper ID, Canted-Coil Spring	Low friction with contamination resistance. Available in 155 cross-section and higher.	Yes	Low	Good	Yes	1000	**Pages 7-9, 7-16**	No
FHC-V	O-Ring in Heel OD, Chamfered ID, Cantilever Spring	Optimum sealability. Available in extended heel option only.	Yes	Medium	Very Good	No	1000	**Pages 7-9, 7-16**	No
FHS-V	O-Ring in Heel OD, Scraper ID, Cantilever Spring	Minimizes contamination threat. Available in extended heel option only.	Yes	Medium	Very Good	Yes	1000	**Pages 7-9, 7-16**	No

7

rev. 02/01/2019

01/15/07

Parker Hannifin Corporation
EPS Division
Tel: (801) 972-3000
Fax: (801) 973-4019
www.parker.com/eps

Table 7-4. Product Profiles (Continued)

Profile	Features	Recommended Applications	Available as Standard in High Pressure Extended Heel (up to 10,000 psi)	Friction Rating	Low Pressure Sealability	Good in Abrasive Media	Max. Rotary Surface Speed (in sfpm)	Gland Dimension Table Location	Available in Mil-G-5514
FHC-C 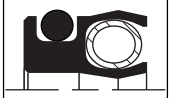	O-Ring in Heel OD, Chamfered ID, Canted-Coil Spring	Reduced friction and sealability. Available in extended heel option only.	Yes	Very Low	Good	No	1000	**Pages 7-9, 7-16**	No
FHS-C 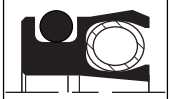	O-Ring in Heel OD, Scraper ID, Canted-Coil Spring	Low friction with contamination resistance. Available in extended heel option only.	Yes	Low	Good	Yes	1000	**Pages 7-9, 7-16**	No
FFC-V 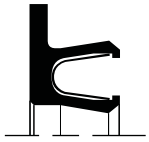	Flanged Heel OD, Chamfered ID, Cantilever Spring	Optimum sealability. Premium bore retention.	No	Medium	Very Good	No	1500	**Pages 7-18, 7-26**	No
FFS-V	Flanged Heel OD, Scraper ID, Cantilever Spring	Minimizes contamination threat. Premium bore retention.	No	Medium	Very Good	Yes	1500	**Pages 7-18, 7-26**	No
FFC-C 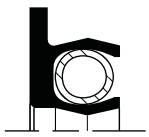	Flanged Heel OD, Chamfered ID, Canted-Coil Spring	Reduced friction and sealability. Premium bore retention.	No	Very Low	Good	No	1500	**Pages 7-18, 7-26**	No
FFS-C 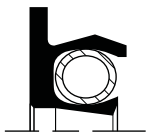	Flanged Heel OD, Scraper ID, Canted-Coil Spring	Low friction with contamination resistance. Premium bore retention.	No	Low	Good	Yes	1500	**Pages 7-18, 7-26**	No
FFN-H	Flanged Heel OD, Rounded ID, Helical Spring	Static or intermittent rotary only. High sealability and friction.	No	High	Excellent	No	50	**Pages 7-18, 7-26**	No

Parker Hannifin Corporation
EPS Division
Tel: (801) 972-3000
Fax: (801) 973-4019

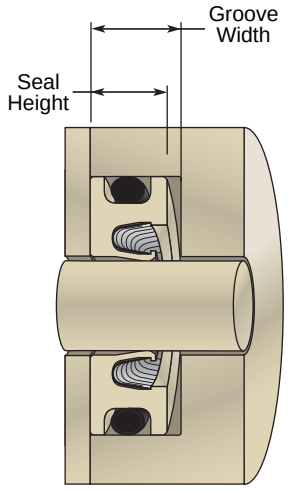

Rotary Application

Table 7-5. Seal Height Callouts

Radial Cross-Section	Std. FC Seal Height Callout	Std. FH Seal Height Callout
093	N/A	195
125	N/A	265
187	260	345
250	355	425

Note: FH profiles are available in extended heel only.

FC and FH Profiles

FC FlexiSeal Rotary Shaft, Centered O-Ring profiles and FH FlexiSeal Rotary Shaft, O-Ring in Heel profiles are available in the Industrial Inch/Fractional and Metric sizes on the following pages.

Design Considerations

- Hardware Configurations/Installation, see **Page 2-3**
- Surface Finish and Hardness, see **Page 2-9**
- Extrusion Gaps and High Pressure, see **Page 2-10**
- Spring Choices, see **Page 2-12**
- Lip Shapes, see **Page 2-16**
- Rotary Seal Considerations, see **Page 2-17**
- Shaft Misalignment Issues, see **Page 2-19**

Part Number Example

Table 7-6. FC and FH Inch/Fractional Part Number

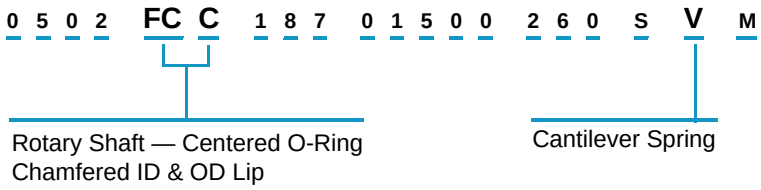

Extended Heel Option

All part numbers on the following pages call for the standard seal height for pressures below 3000 psi.

The heel of a FlexiSeal can be extended to increase extrusion resistance simply by changing the seal height callout in the part number.

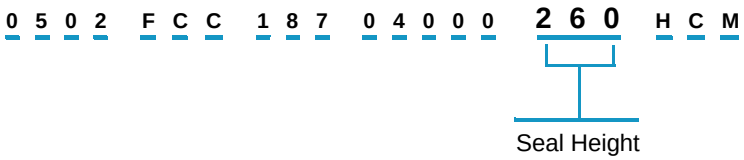

01/15/07

Parker Hannifin Corporation
EPS Division
Tel: (801) 972-3000
Fax: (801) 973-4019

Gland Dimensions — FC and FH Profiles

Table 7-7. FC and FH Inch/Fractional Gland Dimensions

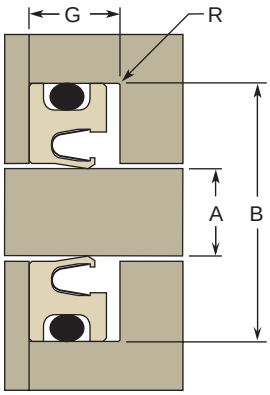

Rotary Seal

Each of these FlexiSeal profiles were designed to fit into either the Inch/Fractional glands on the following pages or the Metric glands on **Page 7-16**.

FC part numbers are available only in 187 (3/16") cross-section and higher.

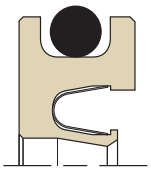

FCC-V

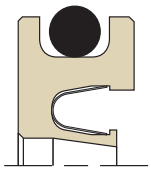

FCS-V

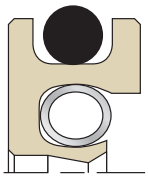

FCC-C

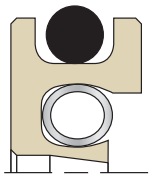

FCS-C

FH part numbers are available in extended heel only.

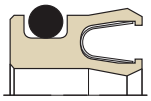

FHC-V

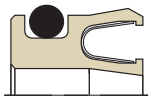

FHS-V

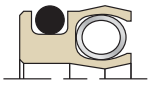

FHC-C

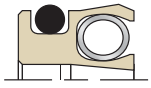

FHS-C

Parker Hannifin Corporation
EPS Division
Tel: (801) 972-3000
Fax: (801) 973-4019

Table 7-7. FC and FH Inch/Fractional Gland Dimensions (Continued)

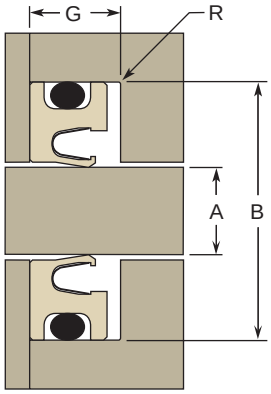

Rotary Seal

R = 0.010" max. radius

G for FH Seal groove = 0.210/0.220" (195 callout)

Dash #	A Shaft Diameter +.000/ -.002	B Groove Diameter +.002/ -.000	Part Number
-106	0.187	0.375	xxxxFHx09300187195xxx
-107	0.219	0.406	xxxxFHx09300219195xxx
-108	0.250	0.437	xxxxFHx09300250195xxx
-109	0.312	0.500	xxxxFHx09300312195xxx
-110	0.375	0.562	xxxxFHx09300375195xxx
-111	0.437	0.625	xxxxFHx09300437195xxx
-112	0.500	0.687	xxxxFHx09300500195xxx
-113	0.562	0.750	xxxxFHx09300562195xxx
-114	0.625	0.812	xxxxFHx09300625195xxx
-115	0.687	0.875	xxxxFHx09300687195xxx
-116	0.750	0.937	xxxxFHx09300750195xxx
-117	0.812	1.000	xxxxFHx09300812195xxx
-118	0.875	1.062	xxxxFHx09300875195xxx
-119	0.937	1.125	xxxxFHx09300937195xxx
-120	1.000	1.187	xxxxFHx09301000195xxx
-121	1.062	1.250	xxxxFHx09301062195xxx

Dash #	A Shaft Diameter	B Groove Diameter	Part Number
-122	1.125	1.312	xxxxFHx09301125195xxx
-123	1.187	1.375	xxxxFHx09301187195xxx
-124	1.250	1.437	xxxxFHx09301250195xxx
-125	1.312	1.500	xxxxFHx09301312195xxx
-126	1.375	1.562	xxxxFHx09301375195xxx
-127	1.437	1.625	xxxxFHx09301437195xxx
-128	1.500	1.687	xxxxFHx09301500195xxx
-129	1.562	1.750	xxxxFHx09301562195xxx
-130	1.625	1.812	xxxxFHx09301625195xxx
-131	1.687	1.875	xxxxFHx09301687195xxx
-132	1.750	1.937	xxxxFHx09301750195xxx
-133	1.812	2.000	xxxxFHx09301812195xxx
-134	1.875	2.062	xxxxFHx09301875195xxx
-135	1.937	2.125	xxxxFHx09301937195xxx
-136	2.000	2.187	xxxxFHx09302000195xxx
-137	2.062	2.250	xxxxFHx09302062195xxx
-138	2.125	2.312	xxxxFHx09302125195xxx
-139	2.187	2.375	xxxxFHx09302187195xxx
-140	2.250	2.437	xxxxFHx09302250195xxx
-141	2.312	2.500	xxxxFHx09302312195xxx
-142	2.375	2.562	xxxxFHx09302375195xxx
-143	2.437	2.625	xxxxFHx09302437195xxx
-144	2.500	2.687	xxxxFHx09302500195xxx
-145	2.562	2.750	xxxxFHx09302562195xxx
-146	2.625	2.812	xxxxFHx09302625195xxx
-147	2.687	2.875	xxxxFHx09302687195xxx
-148	2.750	2.937	xxxxFHx09302750195xxx
-149	2.812	3.000	xxxxFHx09302812195xxx
-150	2.875	3.062	xxxxFHx09302875195xxx
-151	3.000	3.187	xxxxFHx09303000195xxx
-152	3.250	3.437	xxxxFHx09303250195xxx
-153	3.500	3.687	xxxxFHx09303500195xxx
-154	3.750	3.937	xxxxFHx09303750195xxx
-155	4.000	4.187	xxxxFHx09304000195xxx
-156	4.250	4.437	xxxxFHx09304250195xxx
-157	4.500	4.687	xxxxFHx09304500195xxx

02/15/08

Parker Hannifin Corporation
EPS Division
Tel: (801) 972-3000
Fax: (801) 973-4019

Table 7-7. FC and FH Inch/Fractional Gland Dimensions (Continued)

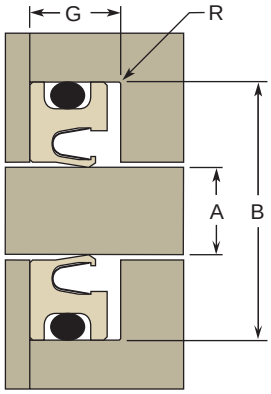

Rotary Seal

Dash #	A Shaft Diameter	B Groove Diameter	Part Number
R = 0.010" max. radius			
G for FH Seal groove = 0.210/0.220" (195 callout)			
	+.000/ -.002	+.002/ -.000	
-158	4.750	4.937	**xxxxFHx09304750195xxx**
-159	5.000	5.187	**xxxxFHx09305000195xxx**
-160	5.250	5.437	**xxxxFHx09305250195xxx**
-161	5.500	5.687	**xxxxFHx09305500195xxx**
-162	5.750	5.928	**xxxxFHx09305750195xxx**
-163	6.000	6.187	**xxxxFHx09306000195xxx**
R = 0.010" max. radius			
G for FH Seal groove = 0.285/0.295" (265 callout)			
	+.000/ -.002	+.002/ -.000	
-202	0.250	0.500	**xxxxFHx12500250265xxx**
-203	0.312	0.562	**xxxxFHx12500312265xxx**
-204	0.375	0.625	**xxxxFHx12500375265xxx**
-205	0.437	0.687	**xxxxFHx12500437265xxx**
-206	0.500	0.750	**xxxxFHx12500500265xxx**
-207	0.562	0.812	**xxxxFHx12500562265xxx**
-208	0.625	0.875	**xxxxFHx12500625265xxx**
-209	0.687	0.937	**xxxxFHx12500687265xxx**
-210	0.750	1.000	**xxxxFHx12500750265xxx**
-211	0.812	1.062	**xxxxFHx12500812265xxx**
-212	0.875	1.125	**xxxxFHx12500875265xxx**
-213	0.937	1.187	**xxxxFHx12500937265xxx**
-214	1.000	1.250	**xxxxFHx12501000265xxx**
-215	1.062	1.312	**xxxxFHx12501062265xxx**
-216	1.125	1.375	**xxxxFHx12501125265xxx**
-217	1.187	1.437	**xxxxFHx12501187265xxx**
-218	1.250	1.500	**xxxxFHx12501250265xxx**
-219	1.312	1.562	**xxxxFHx12501312265xxx**
-220	1.375	1.625	**xxxxFHx12501375265xxx**
-221	1.437	1.687	**xxxxFHx12501437265xxx**
-222	1.500	1.750	**xxxxFHx12501500265xxx**
-223	1.625	1.875	**xxxxFHx12501625265xxx**
-224	1.750	2.000	**xxxxFHx12501750265xxx**

Dash #	A Shaft Diameter	B Groove Diameter	Part Number
-225	1.875	2.125	**xxxxFHx12501875265xxx**
-226	2.000	2.250	**xxxxFHx12502000265xxx**
-227	2.125	2.375	**xxxxFHx12502125265xxx**
-228	2.250	2.500	**xxxxFHx12502250265xxx**
-229	2.375	2.625	**xxxxFHx12502375265xxx**
-230	2.500	2.750	**xxxxFHx12502500265xxx**
-231	2.625	2.875	**xxxxFHx12502625265xxx**
-232	2.750	3.000	**xxxxFHx12502750265xxx**
-233	2.875	3.125	**xxxxFHx12502875265xxx**
-234	3.000	3.250	**xxxxFHx12503000265xxx**
-235	3.125	3.375	**xxxxFHx12503125265xxx**
-236	3.250	3.500	**xxxxFHx12503250265xxx**
-237	3.375	3.625	**xxxxFHx12503375265xxx**
-238	3.500	3.750	**xxxxFHx12503500265xxx**
-239	3.625	3.875	**xxxxFHx12503625265xxx**
-240	3.750	4.000	**xxxxFHx12503750265xxx**
-241	3.875	4.125	**xxxxFHx12503875265xxx**
-242	4.000	4.250	**xxxxFHx12504000265xxx**
-243	4.125	4.375	**xxxxFHx12504125265xxx**
-244	4.250	4.500	**xxxxFHx12504250265xxx**
-245	4.375	4.625	**xxxxFHx12504375265xxx**
-246	4.500	4.750	**xxxxFHx12504500265xxx**
-247	4.625	4.875	**xxxxFHx12504625265xxx**
-248	4.750	5.000	**xxxxFHx12504750265xxx**
-249	4.875	5.125	**xxxxFHx12504875265xxx**
-250	5.000	5.250	**xxxxFHx12505000265xxx**
-251	5.125	5.375	**xxxxFHx12505125265xxx**
-252	5.250	5.500	**xxxxFHx12505250265xxx**
-253	5.375	5.625	**xxxxFHx12505375265xxx**
-254	5.500	5.750	**xxxxFHx12505500265xxx**
-255	5.625	5.875	**xxxxFHx12505625265xxx**
-256	5.750	6.000	**xxxxFHx12505750265xxx**
-257	5.875	6.125	**xxxxFHx12505875265xxx**
-258	6.000	6.250	**xxxxFHx12506000265xxx**
-259	6.250	6.500	**xxxxFHx12506250265xxx**

7

02/15/08

Parker Hannifin Corporation
EPS Division
Tel: (801) 972-3000
Fax: (801) 973-4019

Table 7-7. FC and FH Inch/Fractional Gland Dimensions (Continued)

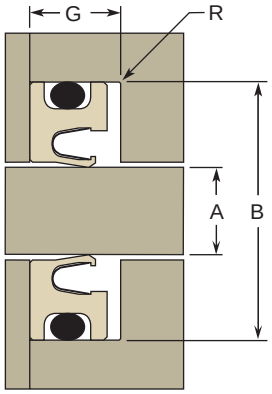

Rotary Seal

Dash #	A Shaft Diameter	B Groove Diameter	Part Number
R = 0.010" max. radius			
G for FH Seal groove = 0.285/0.295" (265 callout)			
	+.000/ -.002	+.002/ -.000	
-260	6.500	6.750	xxxxFHx12506500265xxx
-261	6.750	7.000	xxxxFHx12506750265xxx
-262	7.000	7.250	xxxxFHx12507000265xxx
-263	7.250	7.500	xxxxFHx12507250265xxx
-264	7.500	7.750	xxxxFHx12507500265xxx
-265	7.750	8.000	xxxxFHx12507750265xxx
-266	8.000	8.250	xxxxFHx12508000265xxx
-267	8.250	8.500	xxxxFHx12508250265xxx
-268	8.500	8.750	xxxxFHx12508500265xxx
-269	8.750	9.000	xxxxFHx12508750265xxx
-270	9.000	9.250	xxxxFHx12509000265xxx
-271	9.250	9.500	xxxxFHx12509250265xxx
-272	9.500	9.750	xxxxFHx12509500265xxx
-273	9.750	10.000	xxxxFHx12509750265xxx
-274	10.000	10.250	xxxxFHx12510000265xxx
-275	10.500	10.750	xxxxFHx12510500265xxx
-276	11.000	11.250	xxxxFHx12511000265xxx
-277	11.500	11.750	xxxxFHx12511500265xxx
-278	12.000	12.250	xxxxFHx12512000265xxx
-279	12.500	12.750	xxxxFHx12512500265xxx
-280	13.000	13.250	xxxxFHx12513000265xxx
-281	13.500	13.750	xxxxFHx12513500265xxx
R = 0.015" max. radius			
G for FC Seal groove = 0.281/0.291" (260 callout) G for FH Seal groove = 0.370/0.380" (345 callout)			
	+.000/ -.002	+.002/ -.000	
-310	0.500	0.875	xxxxFCx18700500260xxx
-311	0.562	0.937	xxxxFCx18700562260xxx
-312	0.625	1.000	xxxxFCx18700625260xxx
-313	0.687	1.062	xxxxFCx18700687260xxx
-314	0.750	1.125	xxxxFCx18700750260xxx
-315	0.812	1.187	xxxxFCx18700812260xxx
-316	0.875	1.250	xxxxFCx18700875260xxx
-317	0.937	1.312	xxxxFCx18700937260xxx
-318	1.000	1.375	xxxxFCx18701000260xxx
-319	1.062	1.437	xxxxFCx18701062260xxx
-320	1.125	1.500	xxxxFCx18701125260xxx
-321	1.187	1.562	xxxxFCx18701187260xxx
-322	1.250	1.625	xxxxFCx18701250260xxx
-323	1.312	1.687	xxxxFCx18701312260xxx
-324	1.375	1.750	xxxxFCx18701375260xxx
-325	1.500	1.875	xxxxFCx18701500260xxx
-326	1.625	2.000	xxxxFCx18701625260xxx
-327	1.750	2.125	xxxxFCx18701750260xxx
-328	1.875	2.250	xxxxFCx18701875260xxx
-329	2.000	2.375	xxxxFCx18702000260xxx
-330	2.125	2.500	xxxxFCx18702125260xxx
-331	2.250	2.625	xxxxFCx18702250260xxx
-332	2.375	2.750	xxxxFCx18702375260xxx
-333	2.500	2.875	xxxxFCx18702500260xxx
-334	2.625	3.000	xxxxFCx18702625260xxx
-335	2.750	3.125	xxxxFCx18702750260xxx
-336	2.875	3.250	xxxxFCx18702875260xxx
-337	3.000	3.375	xxxxFCx18703000260xxx
-338	3.125	3.500	xxxxFCx18703125260xxx
-339	3.250	3.625	xxxxFCx18703250260xxx
-340	3.375	3.750	xxxxFCx18703375260xxx
-341	3.500	3.875	xxxxFCx18703500260xxx
-342	3.625	4.000	xxxxFCx18703625260xxx
-343	3.750	4.125	xxxxFCx18703750260xxx
-344	3.875	4.250	xxxxFCx18703875260xxx
-345	4.000	4.375	xxxxFCx18704000260xxx
-346	4.125	4.500	xxxxFCx18704125260xxx
-347	4.250	4.625	xxxxFCx18704250260xxx
-348	4.375	4.750	xxxxFCx18704375260xxx
-349	4.500	4.875	xxxxFCx18704500260xxx
-350	4.625	5.000	xxxxFCx18704625260xxx
-351	4.750	5.125	xxxxFCx18704750260xxx

7

02/15/08

Parker Hannifin Corporation
EPS Division
Tel: (801) 972-3000
Fax: (801) 973-4019

Table 7-7. FC and FH Inch/Fractional Gland Dimensions (Continued)

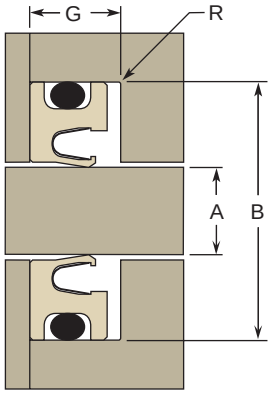

Rotary Seal

Dash #	A Shaft Diameter	B Groove Diameter	Part Number
R = 0.015" max. radius			
G for FC Seal groove = 0.281/0.291" (260 callout) G for FH Seal groove = 0.370/0.380" (345 callout)			
	+.000/ -.002	+.002/ -.000	
-352	4.875	5.250	xxxxFCx18704875260xxx
-353	5.000	5.375	xxxxFCx18705000260xxx
-354	5.125	5.500	xxxxFCx18705125260xxx
-355	5.250	5.625	xxxxFCx18705250260xxx
-356	5.375	5.750	xxxxFCx18705375260xxx
-357	5.500	5.875	xxxxFCx18705500260xxx
-358	5.625	6.000	xxxxFCx18705625260xxx
-359	5.750	6.125	xxxxFCx18705750260xxx
-360	5.875	6.250	xxxxFCx18705875260xxx
-361	6.000	6.375	xxxxFCx18706000260xxx
-362	6.250	6.625	xxxxFCx18706250260xxx
-363	6.500	6.875	xxxxFCx18706500260xxx
-364	6.750	7.125	xxxxFCx18706750260xxx
-365	7.000	7.375	xxxxFCx18707000260xxx
-366	7.250	7.625	xxxxFCx18707250260xxx
-367	7.500	7.875	xxxxFCx18707500260xxx
-368	7.750	8.125	xxxxFCx18707750260xxx
-369	8.000	8.375	xxxxFCx18708000260xxx
-370	8.250	8.625	xxxxFCx18708250260xxx
-371	8.500	8.875	xxxxFCx18708500260xxx
-372	8.750	9.125	xxxxFCx18708750260xxx
-373	9.000	9.375	xxxxFCx18709000260xxx
-374	9.250	9.625	xxxxFCx18709250260xxx
-375	9.500	9.875	xxxxFCx18709500260xxx
-376	9.750	10.125	xxxxFCx18709750260xxx
-377	10.000	10.375	xxxxFCx18710000260xxx
-378	10.500	10.875	xxxxFCx18710500260xxx
-379	11.000	11.375	xxxxFCx18711000260xxx
-380	11.500	11.875	xxxxFCx18711500260xxx
-381	12.000	12.375	xxxxFCx18712000260xxx
-382	13.000	13.375	xxxxFCx18713000260xxx
-383	14.000	14.375	xxxxFCx18714000260xxx
-384	15.000	15.375	xxxxFCx18715000260xxx
-385	16.000	16.375	xxxxFCx18716000260xxx
-386	17.000	17.375	xxxxFCx18717000260xxx
-387	18.000	18.375	xxxxFCx18718000260xxx
-388	19.000	19.375	xxxxFCx18719000260xxx
-389	20.000	20.375	xxxxFCx18720000260xxx
-390	21.000	21.375	xxxxFCx18721000260xxx
-391	22.000	22.375	xxxxFCx18722000260xxx
-392	23.000	23.375	xxxxFCx18723000260xxx
-393	24.000	24.375	xxxxFCx18724000260xxx
-394	25.000	25.375	xxxxFCx18725000260xxx
-395	26.000	26.375	xxxxFCx18726000260xxx
R = 0.015" max. radius			
G for FC Seal groove = 0.375/0.385" (355 callout) G for FH Seal groovegroove = 0.450/0.460" (425 callout)			
	+.000/ -.003	+.003/ -.000	
-401	1.500	2.000	xxxxFCx25001500355xxx
-402	1.625	2.125	xxxxFCx25001625355xxx
-403	1.750	2.250	xxxxFCx25001750355xxx
-404	1.875	2.375	xxxxFCx25001875355xxx
-405	2.000	2.500	xxxxFCx25002000355xxx
-406	2.125	2.625	xxxxFCx25002125355xxx
-407	2.250	2.750	xxxxFCx25002250355xxx
-408	2.375	2.875	xxxxFCx25002375355xxx
-409	2.500	3.000	xxxxFCx25002500355xxx
-410	2.625	3.125	xxxxFCx25002625355xxx
-411	2.750	3.250	xxxxFCx25002750355xxx
-412	2.875	3.375	xxxxFCx25002875355xxx
-413	3.000	3.500	xxxxFCx25003000355xxx
-414	3.125	3.625	xxxxFCx25003125355xxx
-415	3.250	3.750	xxxxFCx25003250355xxx
-416	3.375	3.875	xxxxFCx25003375355xxx
-417	3.500	4.000	xxxxFCx25003500355xxx
-418	3.625	4.125	xxxxFCx25003625355xxx

02/15/08

Parker Hannifin Corporation
EPS Division
Tel: (801) 972-3000
Fax: (801) 973-4019

Table 7-7. FC and FH Inch/Fractional Gland Dimensions (Continued)

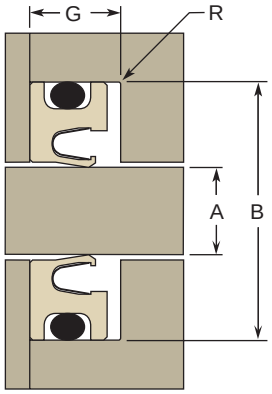

Rotary Seal

R = 0.015" max. radius

G for FC Seal groove = 0.375/0.385" (355 callout)
G for FH Seal groove = 0.450/0.46" (425 callout)

Dash #	A Shaft Diameter +.000/ -.003	B Groove Diameter +.003/ -.000	Part Number
-419	3.750	4.250	xxxxFCx25003750355xxx
-420	3.875	4.375	xxxxFCx25003875355xxx
-421	4.000	4.500	xxxxFCx25004000355xxx
-422	4.125	4.625	xxxxFCx25004125355xxx
-423	4.250	4.750	xxxxFCx25004250355xxx
-424	4.375	4.875	xxxxFCx25004375355xxx
-425	4.500	5.000	xxxxFCx25004500355xxx
-426	4.625	5.125	xxxxFCx25004625355xxx
-427	4.750	5.250	xxxxFCx25004750355xxx
-428	4.875	5.375	xxxxFCx25004875355xxx
-429	5.000	5.500	xxxxFCx25005000355xxx
-430	5.125	5.625	xxxxFCx25005125355xxx
-431	5.250	5.750	xxxxFCx25005250355xxx
-432	5.375	5.875	xxxxFCx25005375355xxx
-433	5.500	6.000	xxxxFCx25005500355xxx
-434	5.625	6.125	xxxxFCx25005625355xxx
-435	5.750	6.250	xxxxFCx25005750355xxx
-436	5.875	6.375	xxxxFCx25005875355xxx
-437	6.000	6.500	xxxxFCx25006000355xxx
-438	6.250	6.750	xxxxFCx25006250355xxx
-439	6.500	7.000	xxxxFCx25006500355xxx
-440	6.750	7.250	xxxxFCx25006750355xxx
-441	7.000	7.500	xxxxFCx25007000355xxx
-442	7.250	7.750	xxxxFCx25007250355xxx
-443	7.500	8.000	xxxxFCx25007500355xxx
-444	7.750	8.250	xxxxFCx25007750355xxx

Dash #	A Shaft Diameter	B Groove Diameter	Part Number
-445	8.000	8.500	xxxxFCx25008000355xxx
-446	8.500	9.000	xxxxFCx25008500355xxx
-447	9.000	9.500	xxxxFCx25009000355xxx
-448	9.500	10.000	xxxxFCx25009500355xxx
-449	10.000	10.500	xxxxFCx25010000355xxx
-450	10.500	11.000	xxxxFCx25010500355xxx
-451	11.000	11.500	xxxxFCx25011000355xxx
-452	11.500	12.000	xxxxFCx25011500355xxx
-453	12.000	12.500	xxxxFCx25012000355xxx
-454	12.500	13.000	xxxxFCx25012500355xxx
-455	13.000	13.500	xxxxFCx25013000355xxx
-456	13.500	14.000	xxxxFCx25013500355xxx
-457	14.000	14.500	xxxxFCx25014000355xxx
-458	14.500	15.000	xxxxFCx25014500355xxx
-459	15.000	15.500	xxxxFCx25015000355xxx
-460	15.500	16.000	xxxxFCx25015500355xxx
-461	16.000	16.500	xxxxFCx25016000355xxx
-462	16.500	17.000	xxxxFCx25016500355xxx
-463	17.000	17.500	xxxxFCx25017000355xxx
-464	17.500	18.000	xxxxFCx25017500355xxx
-465	18.000	18.500	xxxxFCx25018000355xxx
-466	18.500	19.000	xxxxFCx25018500355xxx
-467	19.000	19.500	xxxxFCx25019000355xxx
-468	19.500	20.000	xxxxFCx25019500355xxx
-469	20.000	20.500	xxxxFCx25020000355xxx
-470	21.000	21.500	xxxxFCx25021000355xxx
-471	22.000	22.500	xxxxFCx25022000355xxx
-472	23.000	23.500	xxxxFCx25023000355xxx
-473	24.000	24.500	xxxxFCx25024000355xxx
-474	25.000	25.500	xxxxFCx25025000355xxx
-475	26.000	26.500	xxxxFCx25026000355xxx

02/15/08

Parker Hannifin Corporation
EPS Division
Tel: (801) 972-3000
Fax: (801) 973-4019

Metric FC and FH Profiles

FC FlexiSeal Rotary Shaft, Centered O-Ring profiles and FH FlexiSeal Rotary Shaft, O-Ring in Heel profiles are available in Metric sizes on the following page.

Design Considerations

- Hardware Configurations/Installation, see **Page 2-3**
- Surface Finish and Hardness, see **Page 2-9**
- Extrusion Gaps and High Pressure, see **Page 2-10**
- Spring Choices, see **Page 2-12**
- Lip Shapes, see **Page 2-16**
- Rotary Seal Considerations, see **Page 2-17**
- Shaft Misalignment Issues, see **Page 2-19**

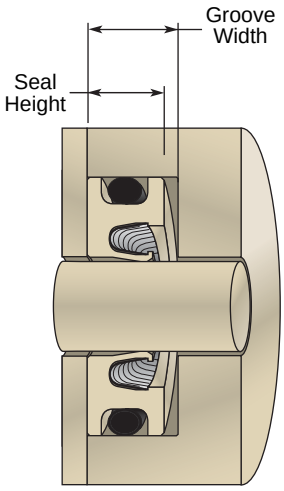

Rotary Application

Table 7-8. Seal Height Callouts

Radial Cross-Section	Std. FC Seal Height Callout	Std. FH Seal Height Callout
0250	N/A	050
0400	N/A	067
0500	066	088
0700	090	108

Note: FH profiles are available in extended heel only.

Part Number Example

Table 7-9. FC and FH Metric Part Number

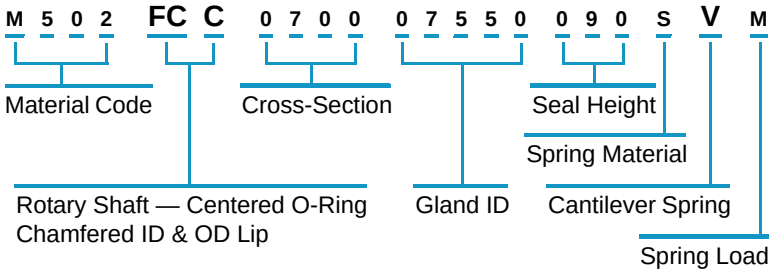

Extended Heel Option

All part numbers on the following page call for the standard seal height for pressures below 3000 psi.

The heel of a FlexiSeal can be extended to increase extrusion resistance simply by changing the seal height callout in the part number.

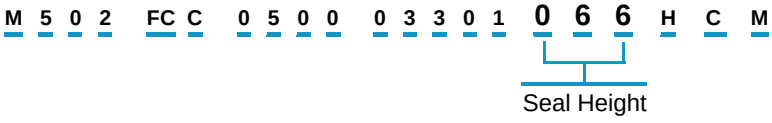

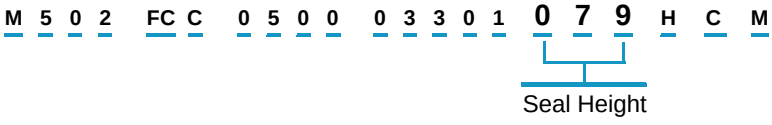

01/15/07

Parker Hannifin Corporation
EPS Division
Tel: (801) 972-3000
Fax: (801) 973-4019

Gland Dimensions — Metric FC & FH Profiles

Each of these FlexiSeal profiles were designed to fit into the Metric glands on this page.

FC part numbers are available only in 0400 (4 mm) cross-section and higher.

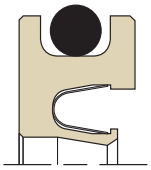

FCC-V

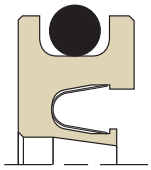

FCS-V

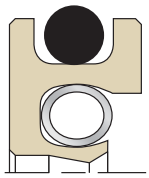

FCC-C

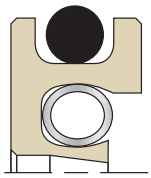

FCS-C

FH part numbers are available in extended heel only.

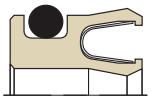

FHC-V

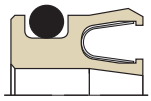

FHS-V

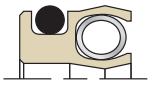

FHC-C

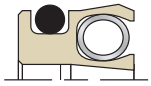

FHS-C

Table 7-10. FC and FH Metric Gland Dimensions

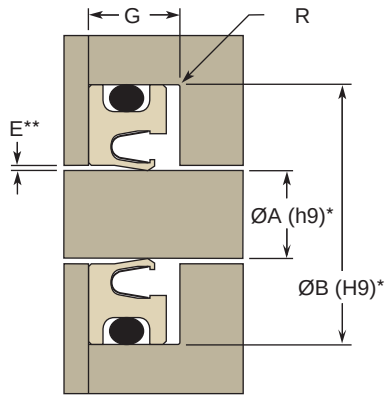

Rotary Seal

Cross-Section Callout	Gland Cross-Section	FC Seal Height Callout	FH Seal Height Callout	FC Groove Width (G) +0.25/-0.00 mm	FH Groove Width (G) +0.25/-0.00 mm	Max Radius (R)
0250	2.50 mm	N/A	050	N/A	5.33 mm	0.25 mm
0400	4.00 mm	N/A	067	N/A	7.24 mm	0.25 mm
0500	5.00 mm	066	088	7.14 mm	9.40 mm	0.38 mm
0700	7.00 mm	090	108	9.53 mm	11.43 mm	0.38 mm

* For ISO Tolerances see **Appendix D**.
** See **Page 2-10** for more on extrusion gap.

Example Part Numbers

Part Number	Shaft Ø (A) in mm	Groove fl (B) in mm	Groove Width (G) in mm
FCS-V Profile			
M301FCS070006504090EVM	65.04 + .00/-.07	79.04 + .07/-.00	9.53 + 0.25/-.00
FHC-C Profile			
M602FHC040002900067SCL	29.00+ 00/-.052	37.00 .062/-.00	7.24 + 0.25/-.00

7

02/15/08

Parker Hannifin Corporation
EPS Division
Tel: (801) 972-3000
Fax: (801) 973-4019

Flanged FlexiSeals

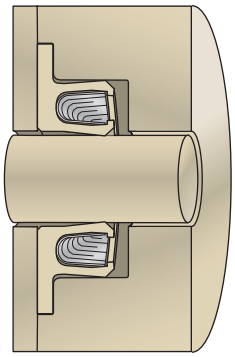

Flanged Rotary Application

FF Profiles

FF FlexiSeal Rotary Shaft, Flanged profiles are clamped axially in the gland to ensure that the seal does not spin with the shaft, especially in applications with frequent thermal cycling.

Design Considerations

- Hardware Configurations/Installation, see **Page 2-3**
- Surface Finish and Hardness, see **Page 2-9**
- Extrusion Gaps and High Pressure, see **Page 2-10**
- Spring Choices, see **Page 2-12**
- Lip Shapes, see **Page 2-16**
- Rotary Seal Considerations, see **Page 2-17**
- Shaft Misalignment Issues, see **Page 2-19**

Part Number Example

Table 7-11. FF Flanged Inch/Fractional Part Number

0	5	0	2	FF	C	1	2	5	0	1	2	5	0	1	7	0	S	V	M
				Rotary Shaft — Flanged Chamfered ID & OD Lip														Cantilever Spring	

7

Parker Hannifin Corporation
EPS Division
Tel: (801) 972-3000
Fax: (801) 973-4019

Gland Dimensions — FF Profiles, Flanged

Table 7-12. FF Flanged Inch/Fractional Gland Dimensions

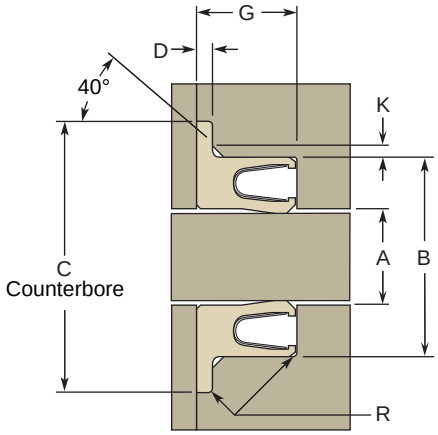

Flanged Seal

Each of these FlexiSeal profiles were designed to fit into either the Inch/Fractional glands on the following pages or the Metric glands on **Page 7-26**.

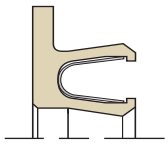

FFC-V

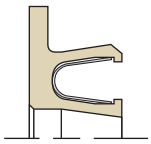

FFS-V

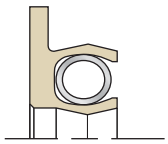

FFC-C

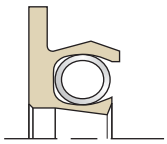

FFS-C

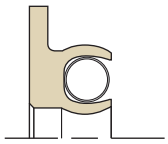

FFN-H

Dash #	A Shaft Dia.	B Groove Dia.	C Flange C-Bore Dia. Min.	Part Number

R = 0.007" max. radius
K = 0.017" Ref.
G for Standard heel groove = 0.094/0.104" (083 callout)
D Gland Counterbore depth for seal flange = 0.011/0.013"

	+.000/ -.002	+.002/ -.000		
-006	0.125	0.250	0.400	**xxxxFFx06200125083xxx**
-007	0.156	0.281	0.431	**xxxxFFx06200156083xxx**
-008	0.187	0.312	0.462	**xxxxFFx06200187083xxx**
-009	0.218	0.343	0.493	**xxxxFFx06200218083xxx**
-010	0.250	0.375	0.525	**xxxxFFx06200250083xxx**
-011	0.312	0.437	0.587	**xxxxFFx06200312083xxx**
-012	0.375	0.500	0.650	**xxxxFFx06200375083xxx**
-013	0.437	0.562	0.712	**xxxxFFx06200437083xxx**
-014	0.500	0.625	0.775	**xxxxFFx06200500083xxx**
-015	0.562	0.687	0.837	**xxxxFFx06200562083xxx**
-016	0.625	0.750	0.900	**xxxxFFx06200625083xxx**
-017	0.687	0.812	0.962	**xxxxFFx06200687083xxx**
-018	0.750	0.875	1.025	**xxxxFFx06200750083xxx**
-019	0.812	0.937	1.087	**xxxxFFx06200812083xxx**
-020	0.875	1.000	1.150	**xxxxFFx06200875083xxx**
-021	0.937	1.062	1.212	**xxxxFFx06200937083xxx**
-022	1.000	1.125	1.275	**xxxxFFx06201000083xxx**
-023	1.062	1.187	1.337	**xxxxFFx06201062083xxx**
-024	1.125	1.250	1.400	**xxxxFFx06201125083xxx**
-025	1.187	1.312	1.462	**xxxxFFx06201187083xxx**
-026	1.250	1.375	1.525	**xxxxFFx06201250083xxx**
-027	1.312	1.437	1.587	**xxxxFFx06201312083xxx**
-028	1.375	1.500	1.650	**xxxxFFx06201375083xxx**
-029	1.500	1.625	1.775	**xxxxFFx06201500083xxx**
-030	1.625	1.750	1.900	**xxxxFFx06201625083xxx**
-031	1.750	1.875	2.025	**xxxxFFx06201750083xxx**

02/15/08

Parker Hannifin Corporation
EPS Division
Tel: (801) 972-3000
Fax: (801) 973-4019

Table 7-12. FF Flanged Inch/Fractional Gland Dimensions (Continued)

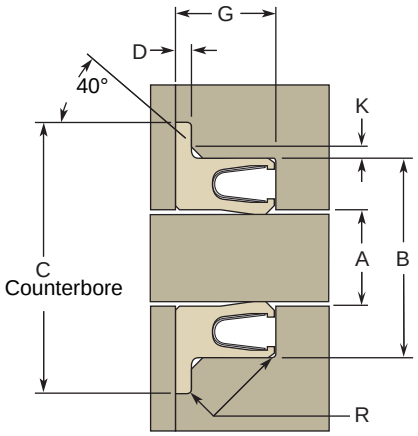

Flanged Seal

Dash #	A Shaft Dia.	B Groove Dia.	C Flange C-Bore Dia. Min.	Part Number
R = 0.007" max. radius K = 0.017" Ref. G for Standard heel groove = 0.094/0.104" (083 callout) D Gland Counterbore depth for seal flange = 0.011/0.013"				
	+.000/ -.002	+.002/ -.000		
-032	1.875	2.000	2.150	**xxxxFFx06201875083xxx**
-033	2.000	2.125	2.275	**xxxxFFx06202000083xxx**
-034	2.125	2.250	2.400	**xxxxFFx06202125083xxx**
-035	2.250	2.375	2.525	**xxxxFFx06202250083xxx**
-036	2.375	2.500	2.650	**xxxxFFx06202375083xxx**
-037	2.500	2.625	2.775	**xxxxFFx06202500083xxx**
-038	2.625	2.750	2.900	**xxxxFFx06202625083xxx**
-039	2.750	2.875	3.025	**xxxxFFx06202750083xxx**
-040	2.875	3.000	3.150	**xxxxFFx06202875083xxx**
-041	3.000	3.125	3.275	**xxxxFFx06203000083xxx**
-042	3.250	3.375	3.525	**xxxxFFx06203250083xxx**
-043	3.500	3.625	3.775	**xxxxFFx06203500083xxx**
-044	3.750	3.875	4.025	**xxxxFFx06203750083xxx**
-045	4.000	4.125	4.275	**xxxxFFx06204000083xxx**
R = 0.010" max. radius K = 0.028" Ref. G for Standard heel groove = 0.141/0.151" (130 callout) D Gland Counterbore depth for seal flange = 0.017/0.020"				
	+.000/ -.002	+.002/ -.000		
-106	0.187	0.375	0.530	**xxxxFFx09300187130xxx**
-107	0.219	0.406	0.561	**xxxxFFx09300219130xxx**
-108	0.250	0.437	0.592	**xxxxFFx09300250130xxx**
-109	0.312	0.500	0.655	**xxxxFFx09300312130xxx**
-110	0.375	0.562	0.717	**xxxxFFx09300375130xxx**
-111	0.437	0.625	0.780	**xxxxFFx09300437130xxx**
-112	0.500	0.687	0.842	**xxxxFFx09300500130xxx**
-113	0.562	0.750	0.905	**xxxxFFx09300562130xxx**
-114	0.625	0.812	0.967	**xxxxFFx09300625130xxx**
-115	0.687	0.875	1.030	**xxxxFFx09300687130xxx**
-116	0.750	0.937	1.092	**xxxxFFx09300750130xxx**
-117	0.812	1.000	1.155	**xxxxFFx09300812130xxx**

Dash #	A Shaft Dia.	B Groove Dia.	C Flange C-Bore Dia. Min.	Part Number
-118	0.875	1.062	1.217	**xxxxFFx09300875130xxx**
-119	0.937	1.125	1.280	**xxxxFFx09300937130xxx**
-120	1.000	1.187	1.342	**xxxxFFx09301000130xxx**
-121	1.062	1.250	1.405	**xxxxFFx09301062130xxx**
-122	1.125	1.312	1.467	**xxxxFFx09301125130xxx**
-123	1.187	1.375	1.530	**xxxxFFx09301187130xxx**
-124	1.250	1.437	1.592	**xxxxFFx09301250130xxx**
-125	1.312	1.500	1.655	**xxxxFFx09301312130xxx**
-126	1.375	1.562	1.717	**xxxxFFx09301375130xxx**
-127	1.437	1.625	1.780	**xxxxFFx09301437130xxx**
-128	1.500	1.687	1.842	**xxxxFFx09301500130xxx**
-129	1.562	1.750	1.905	**xxxxFFx09301562130xxx**
-130	1.625	1.812	1.967	**xxxxFFx09301625130xxx**
-131	1.687	1.875	2.030	**xxxxFFx09301687130xxx**
-132	1.750	1.937	2.092	**xxxxFFx09301750130xxx**
-133	1.812	2.000	2.155	**xxxxFFx09301812130xxx**
-134	1.875	2.062	2.217	**xxxxFFx09301875130xxx**
-135	1.937	2.125	2.280	**xxxxFFx09301937130xxx**
-136	2.000	2.187	2.342	**xxxxFFx09302000130xxx**
-137	2.062	2.250	2.405	**xxxxFFx09302062130xxx**
-138	2.125	2.312	2.467	**xxxxFFx09302125130xxx**
-139	2.187	2.375	2.530	**xxxxFFx09302187130xxx**
-140	2.250	2.437	2.592	**xxxxFFx09302250130xxx**
-141	2.312	2.500	2.655	**xxxxFFx09302312130xxx**
-142	2.375	2.562	2.717	**xxxxFFx09302375130xxx**
-143	2.437	2.625	2.780	**xxxxFFx09302437130xxx**
-144	2.500	2.687	2.842	**xxxxFFx09302500130xxx**
-145	2.562	2.750	2.905	**xxxxFFx09302562130xxx**
-146	2.625	2.812	2.967	**xxxxFFx09302625130xxx**
-147	2.687	2.875	3.030	**xxxxFFx09302687130xxx**
-148	2.750	2.937	3.092	**xxxxFFx09302750130xxx**
-149	2.812	3.000	3.155	**xxxxFFx09302812130xxx**
-150	2.875	3.062	3.217	**xxxxFFx09302875130xxx**
-151	3.000	3.187	3.342	**xxxxFFx09303000130xxx**

02/15/08

Parker Hannifin Corporation
EPS Division
Tel: (801) 972-3000
Fax: (801) 973-4019

Table 7-12. FF Flanged Inch/Fractional Gland Dimensions (Continued)

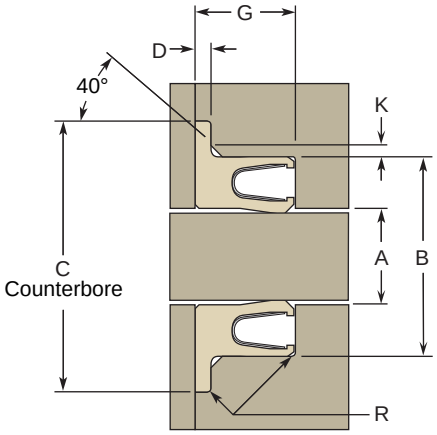

Flanged Seal

Dash #	A Shaft Dia.	B Groove Dia.	C Flange C-Bore Dia. Min.	Part Number

R = 0.010" max. radius
K = 0.028" Ref.
G for Standard heel groove = 0.141/0.151" (130 callout)
D Gland Counterbore depth for seal flange = 0.017/0.020"

	+.000/ -.002	+.002/ -.000		
-152	3.250	3.437	3.592	**xxxxFFx09303250130xxx**
-153	3.500	3.687	3.842	**xxxxFFx09303500130xxx**
-154	3.750	3.937	4.092	**xxxxFFx09303750130xxx**
-155	4.000	4.187	4.342	**xxxxFFx09304000130xxx**
-156	4.250	4.437	4.592	**xxxxFFx09304250130xxx**
-157	4.500	4.687	4.842	**xxxxFFx09304500130xxx**
-158	4.750	4.937	5.092	**xxxxFFx09304750130xxx**
-159	5.000	5.187	5.342	**xxxxFFx09305000130xxx**
-160	5.250	5.437	5.592	**xxxxFFx09305250130xxx**
-161	5.500	5.687	5.842	**xxxxFFx09305500130xxx**
-162	5.750	5.928	6.083	**xxxxFFx09305750130xxx**
-163	6.000	6.187	6.342	**xxxxFFx09306000130xxx**

R = 0.010" max. radius
K = 0.040" Ref.
G for Standard heel groove = 0.188/0.198" (170 callout)
D Gland Counterbore depth for seal flange = 0.024/0.027"

	+.000/ -.002	+.002/ -.000		
-202	0.250	0.500	0.687	**xxxxFFx12500250170xxx**
-203	0.312	0.562	0.749	**xxxxFFx12500312170xxx**
-204	0.375	0.625	0.812	**xxxxFFx12500375170xxx**
-205	0.437	0.687	0.874	**xxxxFFx12500437170xxx**
-206	0.500	0.750	0.937	**xxxxFFx12500500170xxx**
-207	0.562	0.812	0.999	**xxxxFFx12500562170xxx**
-208	0.625	0.875	1.062	**xxxxFFx12500625170xxx**
-209	0.687	0.937	1.124	**xxxxFFx12500687170xxx**
-210	0.750	1.000	1.187	**xxxxFFx12500750170xxx**
-211	0.812	1.062	1.249	**xxxxFFx12500812170xxx**
-212	0.875	1.125	1.312	**xxxxFFx12500875170xxx**
-213	0.937	1.187	1.374	**xxxxFFx12500937170xxx**

Dash #	A Shaft Dia.	B Groove Dia.	C Flange C-Bore Dia. Min.	Part Number
-214	1.000	1.250	1.437	**xxxxFFx12501000170xxx**
-215	1.062	1.312	1.499	**xxxxFFx12501062170xxx**
-216	1.125	1.375	1.562	**xxxxFFx12501125170xxx**
-217	1.187	1.437	1.624	**xxxxFFx12501187170xxx**
-218	1.250	1.500	1.687	**xxxxFFx12501250170xxx**
-219	1.312	1.562	1.749	**xxxxFFx12501312170xxx**
-220	1.375	1.625	1.812	**xxxxFFx12501375170xxx**
-221	1.437	1.687	1.874	**xxxxFFx12501437170xxx**
-222	1.500	1.750	1.937	**xxxxFFx12501500170xxx**
-223	1.625	1.875	2.062	**xxxxFFx12501625170xxx**
-224	1.750	2.000	2.187	**xxxxFFx12501750170xxx**
-225	1.875	2.125	2.312	**xxxxFFx12501875170xxx**
-226	2.000	2.250	2.437	**xxxxFFx12502000170xxx**
-227	2.125	2.375	2.562	**xxxxFFx12502125170xxx**
-228	2.250	2.500	2.687	**xxxxFFx12502250170xxx**
-229	2.375	2.625	2.812	**xxxxFFx12502375170xxx**
-230	2.500	2.750	2.937	**xxxxFFx12502500170xxx**
-231	2.625	2.875	3.062	**xxxxFFx12502625170xxx**
-232	2.750	3.000	3.187	**xxxxFFx12502750170xxx**
-233	2.875	3.125	3.312	**xxxxFFx12502875170xxx**
-234	3.000	3.250	3.437	**xxxxFFx12503000170xxx**
-235	3.125	3.375	3.562	**xxxxFFx12503125170xxx**
-236	3.250	3.500	3.687	**xxxxFFx12503250170xxx**
-237	3.375	3.625	3.812	**xxxxFFx12503375170xxx**
-238	3.500	3.750	3.937	**xxxxFFx12503500170xxx**
-239	3.625	3.875	4.062	**xxxxFFx12503625170xxx**
-240	3.750	4.000	4.187	**xxxxFFx12503750170xxx**
-241	3.875	4.125	4.312	**xxxxFFx12503875170xxx**
-242	4.000	4.250	4.437	**xxxxFFx12504000170xxx**
-243	4.125	4.375	4.562	**xxxxFFx12504125170xxx**
-244	4.250	4.500	4.687	**xxxxFFx12504250170xxx**
-245	4.375	4.625	4.812	**xxxxFFx12504375170xxx**

02/15/08

Parker Hannifin Corporation
EPS Division
Tel: (801) 972-3000
Fax: (801) 973-4019

Table 7-12. FF Flanged Inch/Fractional Gland Dimensions (Continued)

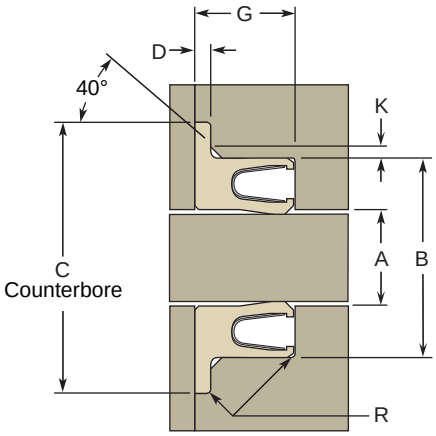

Flanged Seal

Dash #	A Shaft Dia.	B Groove Dia.	C Flange C-Bore Dia. Min.	Part Number

R = 0.010" max. radius
K = 0.040" Ref.
G for Standard heel groove = 0.188/0.198" (170 callout)
D Gland Counterbore depth for seal flange = 0.024/0.027"

	+.000/ -.002	+.002/ -.000		
-246	4.500	4.750	4.937	**xxxxFFx12504500170xxx**
-247	4.625	4.875	5.062	**xxxxFFx12504625170xxx**
-248	4.750	5.000	5.187	**xxxxFFx12504750170xxx**
-249	4.875	5.125	5.312	**xxxxFFx12504875170xxx**
-250	5.000	5.250	5.437	**xxxxFFx12505000170xxx**
-251	5.125	5.375	5.562	**xxxxFFx12505125170xxx**
-252	5.250	5.500	5.687	**xxxxFFx12505250170xxx**
-253	5.375	5.625	5.812	**xxxxFFx12505375170xxx**
-254	5.500	5.750	5.937	**xxxxFFx12505500170xxx**
-255	5.625	5.875	6.062	**xxxxFFx12505625170xxx**
-256	5.750	6.000	6.187	**xxxxFFx12505750170xxx**
-257	5.875	6.125	6.312	**xxxxFFx12505875170xxx**
-258	6.000	6.250	6.437	**xxxxFFx12506000170xxx**
-259	6.250	6.500	6.687	**xxxxFFx12506250170xxx**
-260	6.500	6.750	6.937	**xxxxFFx12506500170xxx**
-261	6.750	7.000	7.187	**xxxxFFx12506750170xxx**
-262	7.000	7.250	7.437	**xxxxFFx12507000170xxx**
-263	7.250	7.500	7.687	**xxxxFFx12507250170xxx**
-264	7.500	7.750	7.937	**xxxxFFx12507500170xxx**
-265	7.750	8.000	8.187	**xxxxFFx12507750170xxx**
-266	8.000	8.250	8.437	**xxxxFFx12508000170xxx**
-267	8.250	8.500	8.687	**xxxxFFx12508250170xxx**
-268	8.500	8.750	8.937	**xxxxFFx12508500170xxx**
-269	8.750	9.000	9.187	**xxxxFFx12508750170xxx**
-270	9.000	9.250	9.437	**xxxxFFx12509000170xxx**
-271	9.250	9.500	9.687	**xxxxFFx12509250170xxx**
-272	9.500	9.750	9.937	**xxxxFFx12509500170xxx**
-273	9.750	10.000	10.187	**xxxxFFx12509750170xxx**

Dash #	A Shaft Dia.	B Groove Dia.	C Flange C-Bore Dia. Min.	Part Number
-274	10.000	10.250	10.437	**xxxxFFx12510000170xxx**
-275	10.500	10.750	10.937	**xxxxFFx12510500170xxx**
-276	11.000	11.250	11.437	**xxxxFFx12511000170xxx**
-277	11.500	11.750	11.937	**xxxxFFx12511500170xxx**
-278	12.000	12.250	12.437	**xxxxFFx12512000170xxx**
-279	12.500	12.750	12.937	**xxxxFFx12512500170xxx**
-280	13.000	13.250	13.437	**xxxxFFx12513000170xxx**
-281	13.500	13.750	13.937	**xxxxFFx12513500170xxx**

R = 0.015" max. radius
K = 0.057" Ref.
G for Standard heel groove = 0.281/0.291" (260 callout)
D Gland Counterbore depth for seal flange = 0.028/0.032"

	+.000/ -.002	+.002/ -.000		
-310	0.500	0.875	1.166	**xxxxFFx18700500260xxx**
-311	0.562	0.937	1.228	**xxxxFFx18700562260xxx**
-312	0.625	1.000	1.291	**xxxxFFx18700625260xxx**
-313	0.687	1.062	1.353	**xxxxFFx18700687260xxx**
-314	0.750	1.125	1.416	**xxxxFFx18700750260xxx**
-315	0.812	1.187	1.478	**xxxxFFx18700812260xxx**
-316	0.875	1.250	1.541	**xxxxFFx18700875260xxx**
-317	0.937	1.312	1.603	**xxxxFFx18700937260xxx**
-318	1.000	1.375	1.666	**xxxxFFx18701000260xxx**
-319	1.062	1.437	1.728	**xxxxFFx18701062260xxx**
-320	1.125	1.500	1.791	**xxxxFFx18701125260xxx**
-321	1.187	1.562	1.853	**xxxxFFx18701187260xxx**
-322	1.250	1.625	1.916	**xxxxFFx18701250260xxx**
-323	1.312	1.687	1.978	**xxxxFFx18701312260xxx**
-324	1.375	1.750	2.041	**xxxxFFx18701375260xxx**
-325	1.500	1.875	2.166	**xxxxFFx18701500260xxx**
-326	1.625	2.000	2.291	**xxxxFFx18701625260xxx**
-327	1.750	2.125	2.416	**xxxxFFx18701750260xxx**

02/15/08

Parker Hannifin Corporation
EPS Division
Tel: (801) 972-3000
Fax: (801) 973-4019

Table 7-12. FF Flanged Inch/Fractional Gland Dimensions (Continued)

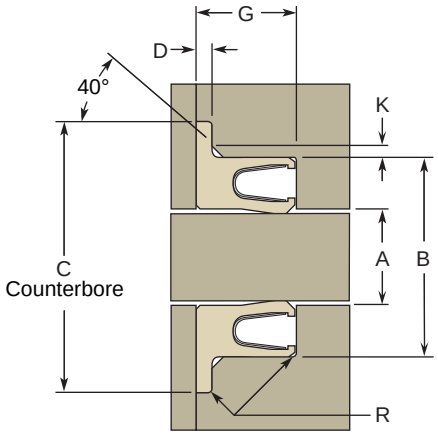

Flanged Seal

Dash #	A Shaft Dia.	B Groove Dia.	C Flange C-Bore Dia. Min.	Part Number

R = 0.015" max. radius
K = 0.057" Ref.
G for Standard heel groove = 0.281/0.291" (260 callout)
D Gland Counterbore depth for seal flange = 0.028/0.032"

	+.000/ -.002	+.002/ -.000		
-328	1.875	2.250	2.541	**xxxxFFx18701875260xxx**
-329	2.000	2.375	2.666	**xxxxFFx18702000260xxx**
-330	2.125	2.500	2.791	**xxxxFFx18702125260xxx**
-331	2.250	2.625	2.916	**xxxxFFx18702250260xxx**
-332	2.375	2.750	3.041	**xxxxFFx18702375260xxx**
-333	2.500	2.875	3.166	**xxxxFFx18702500260xxx**
-334	2.625	3.000	3.291	**xxxxFFx18702625260xxx**
-335	2.750	3.125	3.416	**xxxxFFx18702750260xxx**
-336	2.875	3.250	3.541	**xxxxFFx18702875260xxx**
-337	3.000	3.375	3.666	**xxxxFFx18703000260xxx**
-338	3.125	3.500	3.791	**xxxxFFx18703125260xxx**
-339	3.250	3.625	3.916	**xxxxFFx18703250260xxx**
-340	3.375	3.750	4.041	**xxxxFFx18703375260xxx**
-341	3.500	3.875	4.166	**xxxxFFx18703500260xxx**
-342	3.625	4.000	4.291	**xxxxFFx18703625260xxx**
-343	3.750	4.125	4.416	**xxxxFFx18703750260xxx**
-344	3.875	4.250	4.541	**xxxxFFx18703875260xxx**
-345	4.000	4.375	4.666	**xxxxFFx18704000260xxx**
-346	4.125	4.500	4.791	**xxxxFFx18704125260xxx**
-347	4.250	4.625	4.916	**xxxxFFx18704250260xxx**
-348	4.375	4.750	5.041	**xxxxFFx18704375260xxx**
-349	4.500	4.875	5.166	**xxxxFFx18704500260xxx**
-350	4.625	5.000	5.291	**xxxxFFx18704625260xxx**
-351	4.750	5.125	5.416	**xxxxFFx18704750260xxx**
-352	4.875	5.250	5.541	**xxxxFFx18704875260xxx**
-353	5.000	5.375	5.666	**xxxxFFx18705000260xxx**
-354	5.125	5.500	5.791	**xxxxFFx18705125260xxx**
-355	5.250	5.625	5.916	**xxxxFFx18705250260xxx**
-356	5.375	5.750	6.041	**xxxxFFx18705375260xxx**
-357	5.500	5.875	6.166	**xxxxFFx18705500260xxx**
-358	5.625	6.000	6.291	**xxxxFFx18705625260xxx**
-359	5.750	6.125	6.416	**xxxxFFx18705750260xxx**
-360	5.875	6.250	6.541	**xxxxFFx18705875260xxx**
-361	6.000	6.375	6.666	**xxxxFFx18706000260xxx**
-362	6.250	6.625	6.916	**xxxxFFx18706250260xxx**
-363	6.500	6.875	7.166	**xxxxFFx18706500260xxx**
-364	6.750	7.125	7.416	**xxxxFFx18706750260xxx**
-365	7.000	7.375	7.666	**xxxxFFx18707000260xxx**
-366	7.250	7.625	7.916	**xxxxFFx18707250260xxx**
-367	7.500	7.875	8.166	**xxxxFFx18707500260xxx**
-368	7.750	8.125	8.416	**xxxxFFx18707750260xxx**
-369	8.000	8.375	8.666	**xxxxFFx18708000260xxx**
-370	8.250	8.625	8.916	**xxxxFFx18708250260xxx**
-371	8.500	8.875	9.166	**xxxxFFx18708500260xxx**
-372	8.750	9.125	9.416	**xxxxFFx18708750260xxx**
-373	9.000	9.375	9.666	**xxxxFFx18709000260xxx**
-374	9.250	9.625	9.916	**xxxxFFx18709250260xxx**
-375	9.500	9.875	10.166	**xxxxFFx18709500260xxx**
-376	9.750	10.125	10.416	**xxxxFFx18709750260xxx**
-377	10.000	10.375	10.666	**xxxxFFx18710000260xxx**
-378	10.500	10.875	11.166	**xxxxFFx18710500260xxx**
-379	11.000	11.375	11.666	**xxxxFFx18711000260xxx**
-380	11.500	11.875	12.166	**xxxxFFx18711500260xxx**
-381	12.000	12.375	12.666	**xxxxFFx18712000260xxx**
-382	13.000	13.375	13.666	**xxxxFFx18713000260xxx**
-383	14.000	14.375	14.666	**xxxxFFx18714000260xxx**
-384	15.000	15.375	15.666	**xxxxFFx18715000260xxx**
-385	16.000	16.375	16.666	**xxxxFFx18716000260xxx**
-386	17.000	17.375	17.666	**xxxxFFx18717000260xxx**
-387	18.000	18.375	18.666	**xxxxFFx18718000260xxx**

02/15/08

Parker Hannifin Corporation
EPS Division
Tel: (801) 972-3000
Fax: (801) 973-4019

Table 7-12. FF Flanged Inch/Fractional Gland Dimensions (Continued)

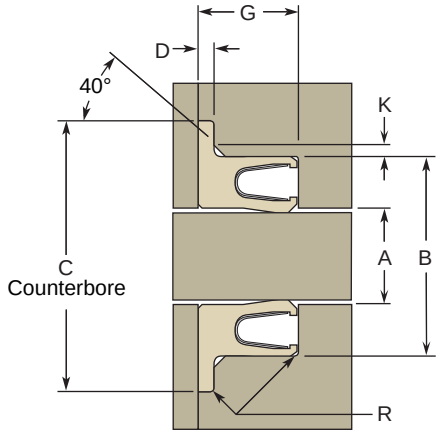

Flanged Seal

Dash #	A Shaft Dia.	B Groove Dia.	C Flange C-Bore Dia. Min.	Part Number

R = 0.015" max. radius
K = 0.057" Ref.
G for Standard heel groove = 0.281/0.291" (260 callout)
D Gland Counterbore depth for seal flange = 0.028/0.032"

	+.000/ -.002	+.002/ -.000		
-388	19.000	19.375	19.666	**xxxxFFx18719000260xxx**
-389	20.000	20.375	20.666	**xxxxFFx18720000260xxx**
-390	21.000	21.375	21.666	**xxxxFFx18721000260xxx**
-391	22.000	22.375	22.666	**xxxxFFx18722000260xxx**
-392	23.000	23.375	23.666	**xxxxFFx18723000260xxx**
-393	24.000	24.375	24.666	**xxxxFFx18724000260xxx**
-394	25.000	25.375	25.666	**xxxxFFx18725000260xxx**
-395	26.000	26.375	26.666	**xxxxFFx18726000260xxx**

R = 0.015" max. radius
K = 0.069" Ref.
G for Standard heel groove = 0.375/0.385" (355 callout)
D Gland Counterbore depth for seal flange = 0.041/0.045"

	+.000/ -.002	+.002/ -.000		
-401	1.500	2.000	2.322	**xxxxFFx25001500355xxx**
-402	1.625	2.125	2.447	**xxxxFFx25001625355xxx**
-403	1.750	2.250	2.572	**xxxxFFx25001750355xxx**
-404	1.875	2.375	2.697	**xxxxFFx25001875355xxx**
-405	2.000	2.500	2.822	**xxxxFFx25002000355xxx**
-406	2.125	2.625	2.947	**xxxxFFx25002125355xxx**
-407	2.250	2.750	3.072	**xxxxFFx25002250355xxx**
-408	2.375	2.875	3.197	**xxxxFFx25002375355xxx**
-409	2.500	3.000	3.322	**xxxxFFx25002500355xxx**
-410	2.625	3.125	3.447	**xxxxFFx25002625355xxx**
-411	2.750	3.250	3.572	**xxxxFFx25002750355xxx**
-412	2.875	3.375	3.697	**xxxxFFx25002875355xxx**
-413	3.000	3.500	3.822	**xxxxFFx25003000355xxx**
-414	3.125	3.625	3.947	**xxxxFFx25003125355xxx**
-415	3.250	3.750	4.072	**xxxxFFx25003250355xxx**
-416	3.375	3.875	4.197	**xxxxFFx25003375355xxx**

Dash #	A Shaft Dia.	B Groove Dia.	C Flange C-Bore Dia. Min.	Part Number
-417	3.500	4.000	4.322	**xxxxFFx25003500355xxx**
-418	3.625	4.125	4.447	**xxxxFFx25003625355xxx**
-419	3.750	4.250	4.572	**xxxxFFx25003750355xxx**
-420	3.875	4.375	4.697	**xxxxFFx25003875355xxx**
-421	4.000	4.500	4.822	**xxxxFFx25004000355xxx**
-422	4.125	4.625	4.947	**xxxxFFx25004125355xxx**
-423	4.250	4.750	5.072	**xxxxFFx25004250355xxx**
-424	4.375	4.875	5.197	**xxxxFFx25004375355xxx**
-425	4.500	5.000	5.322	**xxxxFFx25004500355xxx**
-426	4.625	5.125	5.447	**xxxxFFx25004625355xxx**
-427	4.750	5.250	5.572	**xxxxFFx25004750355xxx**
-428	4.875	5.375	5.697	**xxxxFFx25004875355xxx**
-429	5.000	5.500	5.822	**xxxxFFx25005000355xxx**
-430	5.125	5.625	5.947	**xxxxFFx25005125355xxx**
-431	5.250	5.750	6.072	**xxxxFFx25005250355xxx**
-432	5.375	5.875	6.197	**xxxxFFx25005375355xxx**
-433	5.500	6.000	6.322	**xxxxFFx25005500355xxx**
-434	5.625	6.125	6.447	**xxxxFFx25005625355xxx**
-435	5.750	6.250	6.572	**xxxxFFx25005750355xxx**
-436	5.875	6.375	6.697	**xxxxFFx25005875355xxx**
-437	6.000	6.500	6.822	**xxxxFFx25006000355xxx**
-438	6.250	6.750	7.072	**xxxxFFx25006250355xxx**
-439	6.500	7.000	7.322	**xxxxFFx25006500355xxx**
-440	6.750	7.250	7.572	**xxxxFFx25006750355xxx**
-441	7.000	7.500	7.822	**xxxxFFx25007000355xxx**
-442	7.250	7.750	8.072	**xxxxFFx25007250355xxx**
-443	7.500	8.000	8.322	**xxxxFFx25007500355xxx**
-444	7.750	8.250	8.572	**xxxxFFx25007750355xxx**
-445	8.000	8.500	8.822	**xxxxFFx25008000355xxx**
-446	8.500	9.000	9.322	**xxxxFFx25008500355xxx**
-447	9.000	9.500	9.822	**xxxxFFx25009000355xxx**
-448	9.500	10.000	10.322	**xxxxFFx25009500355xxx**
-449	10.000	10.500	10.822	**xxxxFFx25010000355xxx**
-450	10.500	11.000	11.322	**xxxxFFx25010500355xxx**

02/15/08

Parker Hannifin Corporation
EPS Division
Tel: (801) 972-3000
Fax: (801) 973-4019

Table 7-12. FF Flanged Inch/Fractional Gland Dimensions (Continued)

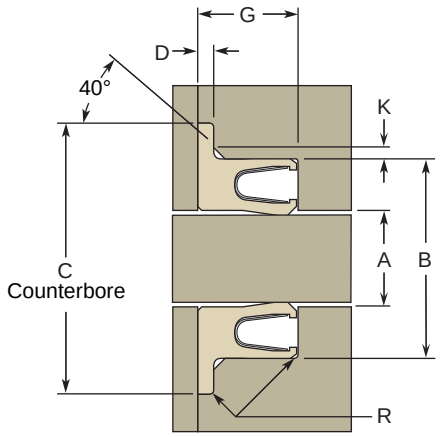

Flanged Seal

R = 0.015" max. radius
K = 0.069" Ref.
G for Standard heel groove = 0.375/0.385" (355 callout)
D Gland Counterbore depth for seal flange = 0.041/0.045"

Dash #	A Shaft Dia. +.000/ -.002	B Groove Dia. +.002/ -.000	C Flange C-Bore Dia. Min.	Part Number
-451	11.000	11.500	11.822	**xxxxFFx25011000355xxx**
-452	11.500	12.000	12.322	**xxxxFFx25011500355xxx**
-453	12.000	12.500	12.822	**xxxxFFx25012000355xxx**
-454	12.500	13.000	13.322	**xxxxFFx25012500355xxx**
-455	13.000	13.500	13.822	**xxxxFFx25013000355xxx**
-456	13.500	14.000	14.322	**xxxxFFx25013500355xxx**
-457	14.000	14.500	14.822	**xxxxFFx25014000355xxx**
-458	14.500	15.000	15.322	**xxxxFFx25014500355xxx**
-459	15.000	15.500	15.822	**xxxxFFx25015000355xxx**
-460	15.500	16.000	16.322	**xxxxFFx25015500355xxx**

Dash #	A Shaft Dia.	B Groove Dia.	C Flange C-Bore Dia. Min.	Part Number
-461	16.000	16.500	16.822	**xxxxFFx25016000355xxx**
-462	16.500	17.000	17.322	**xxxxFFx25016500355xxx**
-463	17.000	17.500	17.822	**xxxxFFx25017000355xxx**
-464	17.500	18.000	18.322	**xxxxFFx25017500355xxx**
-465	18.000	18.500	18.822	**xxxxFFx25018000355xxx**
-466	18.500	19.000	19.322	**xxxxFFx25018500355xxx**
-467	19.000	19.500	19.822	**xxxxFFx25019000355xxx**
-468	19.500	20.000	20.322	**xxxxFFx25019500355xxx**
-469	20.000	20.500	20.822	**xxxxFFx25020000355xxx**
-470	21.000	21.500	21.822	**xxxxFFx25021000355xxx**
-471	22.000	22.500	22.822	**xxxxFFx25022000355xxx**
-472	23.000	23.500	23.822	**xxxxFFx25023000355xxx**
-473	24.000	24.500	24.822	**xxxxFFx25024000355xxx**
-474	25.000	25.500	25.822	**xxxxFFx25025000355xxx**
-475	26.000	26.500	26.822	**xxxxFFx25026000355xxx**

02/15/08

Parker Hannifin Corporation
EPS Division
Tel: (801) 972-3000
Fax: (801) 973-4019

Flanged FlexiSeal

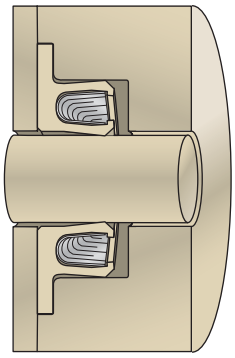

Flanged Rotary Application

Metric FF Profiles

FF FlexiSeal Rotary Shaft, Flanged profiles are clamped axially in the gland to ensure that the seal does not spin with the shaft, especially in applications with frequent thermal cycling.

Design Considerations

- Hardware Configurations/Installation, see **Page 2-3**
- Surface Finish and Hardness, see **Page 2-9**
- Extrusion Gaps and High Pressure, see **Page 2-10**
- Spring Choices, see **Page 2-12**
- Lip Shapes, see **Page 2-16**
- Rotary Seal Considerations, see **Page 2-17**
- Shaft Misalignment Issues, see **Page 2-19**

Part Number Example

Table 7-13. FF Flanged Metric Part Number

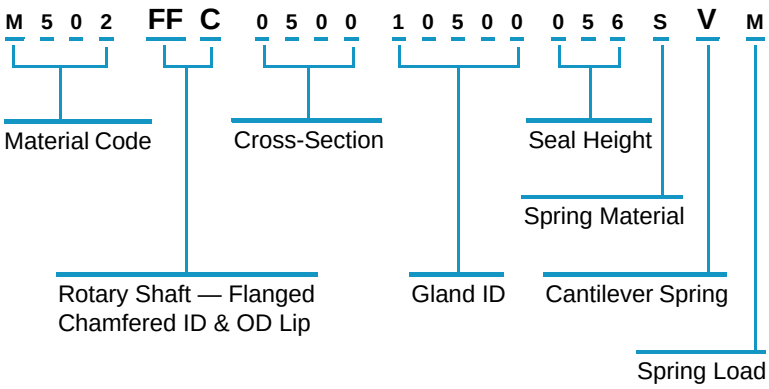

Parker Hannifin Corporation
EPS Division
Tel: (801) 972-3000
Fax: (801) 973-4019

Gland Dimensions — FF Profiles, Flanged Metric

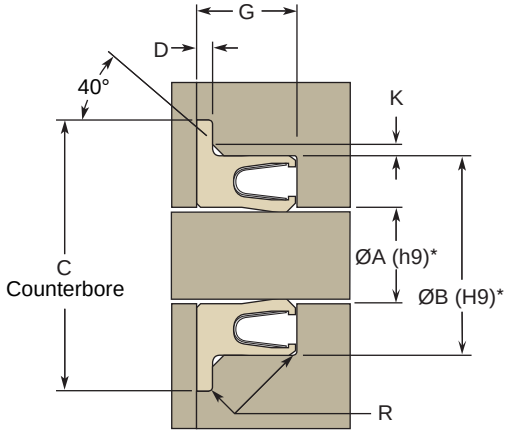

Flanged Seal

Each of these FlexiSeal profiles were designed to fit into the Metric glands on this page.

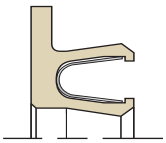

FFC-V

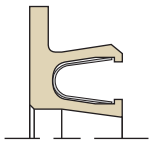

FFS-V

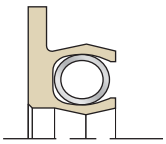

FFC-C

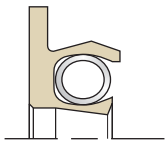

FFS-C

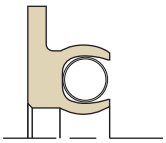

FFN-H

Table 7-14. FF Flanged Metric Gland Dimensions

Cross-Section Callout	Gland Cross-Section	Heel Height Callout	Heel Groove Width (G) +0.25/-0.00 mm	Counter Bore Depth (D)	Counter Bore Min. Dia. (C)	Chamfer Size (K)	Max Radius (R)
0200	2.00 mm	021	2.39 mm	0.28/ 0.33 mm	ØA + 7.81 mm	0.43 mm	0.18 mm
0250	2.50 mm	033	3.58 mm	0.43/ 0.51 mm	ØA + 8.94 mm	0.71 mm	0.25 mm
0400	4.00 mm	043	4.78 mm	0.61/ 0.69 mm	ØA + 12.75 mm	1.02 mm	0.25 mm
0500	5.00 mm	066	7.14 mm	0.71/ 0.81 mm	ØA + 17.39 mm	1.45 mm	0.38 mm
0700	7.00 mm	090	9.53 mm	1.04/ 1.14 mm	ØA + 22.18 mm	1.75 mm	0.38 mm

* For ISO Tolerances see **Appendix D**.
** See **Page 2-10** for more on extrusion gap.

Example Part Numbers

Part Number	Shaft Ø (A) in mm	Groove Ø (B) in mm	Counter-Bore Ø (C) in mm	Counter-Bore Depth (D) in mm	Groove Width (G) in mm
FFC-V Profile					
M100FFC070012500090SVL	125.00 +.00/-.10	139.00 +.10/-.00	147.18 Min.	1.04/1.14	9.53 +0.25/-.00
FFS-C Profile					
M301FFS020001100021HCH	11.00 +.00/-.04	15.00 +.04/-.00	18.81 Min.	0.28/0.33	2.39 +0.25/-.00

02/15/08

Parker Hannifin Corporation
EPS Division
Tel: (801) 972-3000
Fax: (801) 973-4019

Notes

Parker Hannifin Corporation
EPS Division
Tel: (801) 972-3000
Fax: (801) 973-4019

FlexiLip™ Rotary Seals Introduction

Contents

Engineering 8-3
Materials 8-6
Product Offering 8-7

FlexiLip

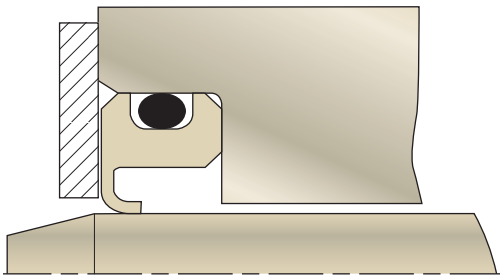

FlexiLip Application

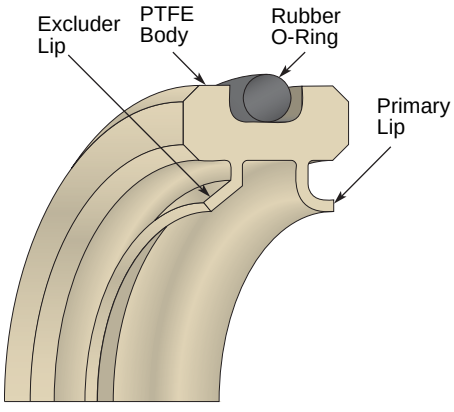

FlexiLip Components

What Is a FlexiLip and How Does It Work?

The Parker FlexiLip is a rotary lip seal that features an ID lip that seals dynamically on a shaft and an elastomeric O-ring on its OD to seal statically in a bore. Since the lip is not spring energized, the radial lip contact forces are lower than a rotary FlexiSeal, which allows the seal to function at much higher surface speeds (up to 5000 sfpm).

The seals are manufactured from a wide variety of PTFE composites and other machinable plastic materials. Standard O-ring choices are fluorocarbon, silicone, nitrile and EPDM. This broad foundation of standard O-ring and PTFE materials can be tailored to suit nearly all applications. Standard and Non-standard FlexiLip profiles are precision machined to fit inch-fractional and metric gland geometries. The FlexiLip design is extremely versatile because the seal is machined from a molded PTFE sleeve. Standard tooling and programs are used to manufacture seals efficiently by eliminating setup and programming time. FlexiLip seals are used in demanding applications where the operating conditions exceed the capabilities of elastomeric seals.

Applications

The FlexiLip's versatility makes it suitable for a wide range of applications including:

- Motors
- Gear Boxes
- Pumps
- Bearings
- Compressors
- Cryogenics
- Rolls
- Extruders
- Valves
- Blowers
- Spindles
- Robotics
- Mixers

Markets

FlexiLip's low tooling costs and rapid prototyping capability make the FlexiLip an appealing choice for customers in a variety of markets including:

- Aerospace
- Automotive
- Chemical Process
- Appliances
- Machine Tools
- Marine
- Medical
- Pharmaceutical
- Military
- Heavy Machinery
- Pulp & Paper
- Hydraulic
- Food Processing
- Electronic
- Oil & Gas
- Steel Mill
- Plastics

01/15/06

www.parker.com/eps

Parker Hannifin Corporation
EPS Division
Tel: (801) 972-3000
Fax: (801) 973-4019

Part Number Nomenclature — FlexiLip

Table 8-1. FlexiLip Part Number Nomenclature

English

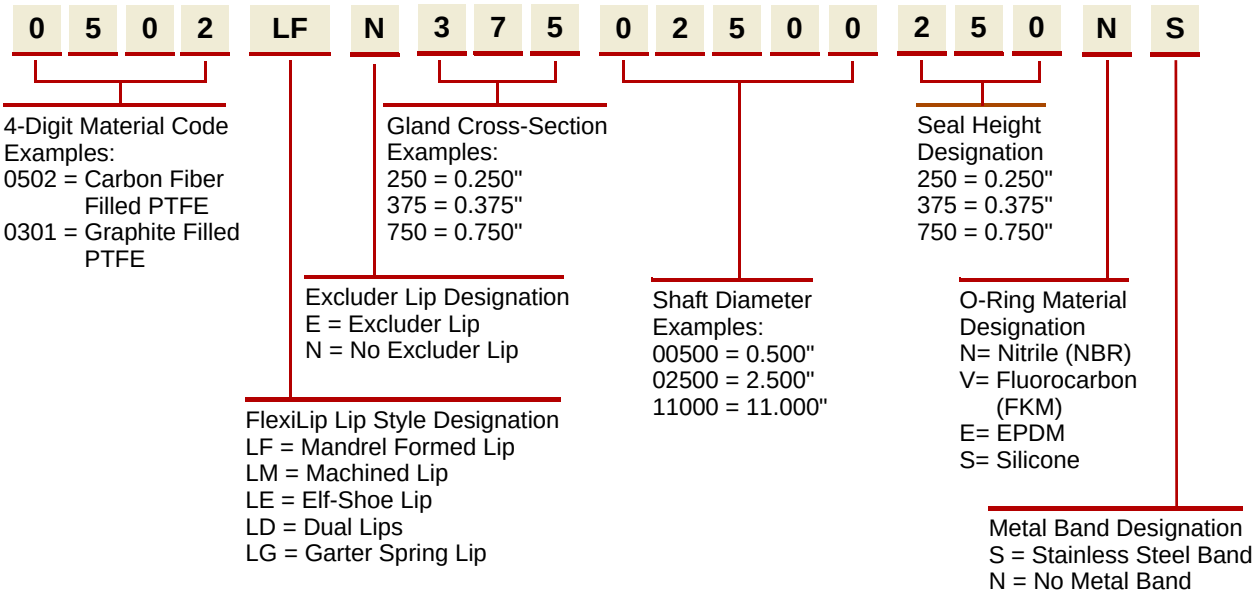

Metric

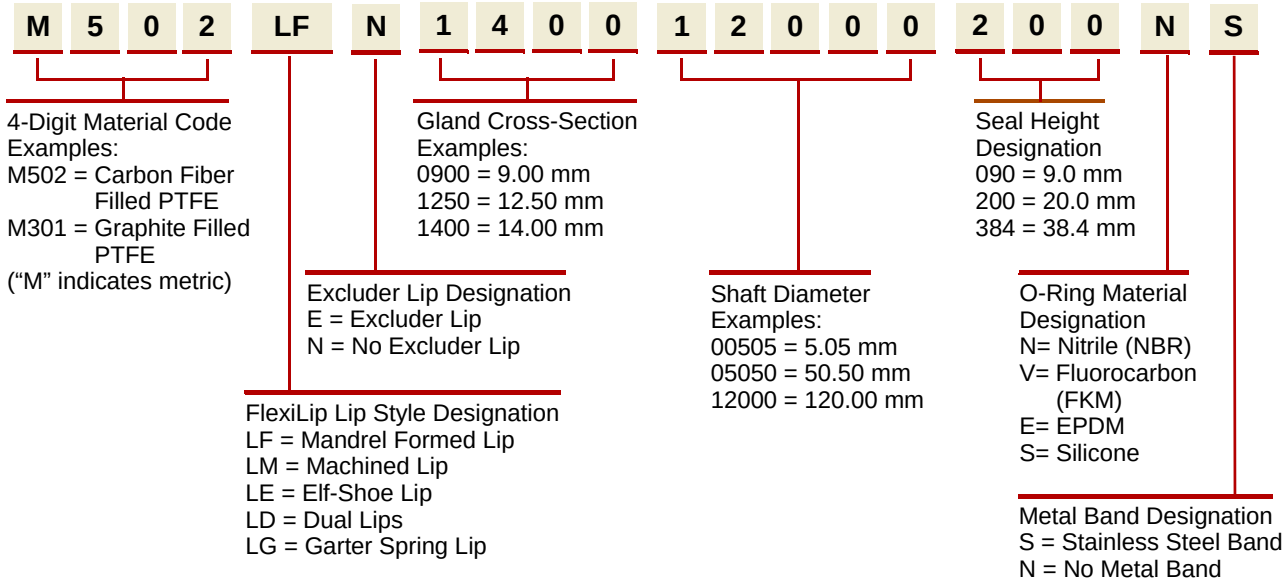

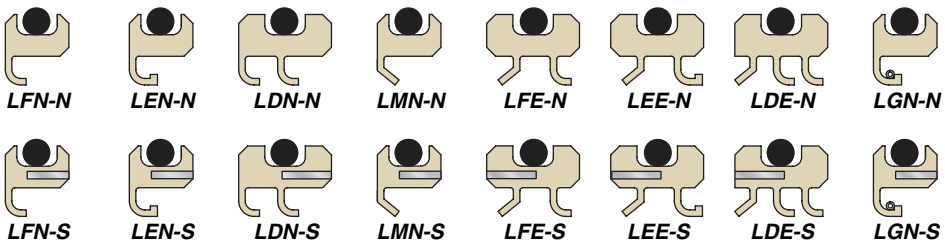

01/15/06

Parker Hannifin Corporation
EPS Division
Tel: (801) 972-3000
Fax: (801) 973-4019
www.parker.com/eps

Choosing the Right Design

From Gland Dimensions to Part Number

Step 1 — Choose profile. Choose the best profile for your application from the decision tree and table on **Pages 8-7** through **8-9**, and place the 4-character profile description into the part number as shown here in this example.

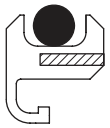

Choice: LEN-S Profile
xxxx**LEN**xxxxxxxxxxxx**S**

Step 2 — Choose material. Choose the best material for the application and place the 4-digit material code into the part number as shown here:

Choice: 0502 — Carbon Fiber Filled PTFE
0502LENxxxxxxxxxxxxS

Step 3 — Choose O-ring material. Choose the best O-ring material after considering the chemicals and temperatures it will be exposed to. Consult the *Parker O-Ring Handbook* (ORD 5700A/US section II) as a general reference and choose the most appropriate material family. Place in the part number as shown here:

Choice: Fluorocarbon O-ring (V code)
0502LENxxxxxxxxxxx**V**S

Step 4 — Fill in the size portion of the part number. Choose the optimal size of the part based on the limitations of the cross-section and diameter (**Page 8-9**) and place into the part number as shown:

Choice: 1.500" shaft x 2.000" bore x 0.500" bore depth

Calculate Radial Cross-Section and input into part number:

(2.000" Bore – 1.500" Shaft) / 2 = 0.250"
0502LEN**250**xxxxxxxxVS

Input shaft diameter into part number:
0502LEN250**01500**xxxVS

Find minimum seal width from **Page 8-9** and input into part number. Minimum seal width is always the most economical, but you can choose any width between the minimum recommended seal width and the actual bore depth. In this case you could choose any width between 0.250" and 0.500".

Minimum seal width = 0.250"
0502LEN25002000**250**VS

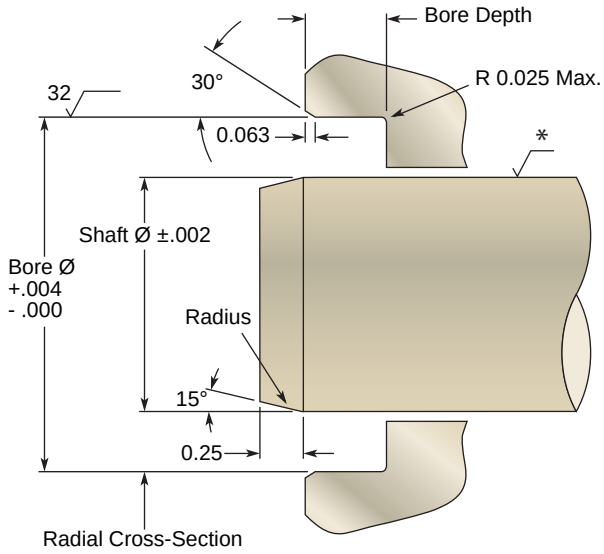

*Note: For more specific information on surface finish refer to **Table 2-6** on **Page 2-9**.

From Part Number to Gland Dimensions

Step 1 — Extract shaft dimensions from part number:

0502LEN375**02125**736VS

02125 = 2.125" shaft diameter
For 2.125" shaft tolerance = ±.002" from drawing above.

Step 2 — Extract bore diameter from part number:

0502LEN**37502125**736VS

375 = 0.375" cross-section
bore Ø = shaft Ø + (2 x cross-section)
bore Ø = 2.125" + (2 x 0.375) = 2.875"
For 2.875" bore, tolerance = +.004/-.000 from drawing above.

Step 3 — Extract bore depth from part number:

0502LEN37502125**736**VS

736 = 0.736" seal height
min. bore depth = seal height + 0.010"
min. bore depth = 0.736" + 0.010" = 0.746"

01/15/06

Parker Hannifin Corporation
EPS Division
Tel: (801) 972-3000
Fax: (801) 973-4019
www.parker.com/eps

Table 8-2. Part Number Examples

	Profile	Shaft Dia.	Bore Dia.	Min. Bore Depth	O-ring Material
0204LEN43703624375EN	LEN-N	2.750 ± .002"	3.624 + .004/-.000"	0.385"	EPDM
0301LDE50105550525VS	LDE-S	4.548 ± .002"	5.550 + .004/-.000"	0.535"	Fluorocarbon
M127LGN09106620140SS	LGN-S	48.0 ± .08 mm	66.2 + .16/-0 mm	14.25 mm	Silicone
M615LFE12516000200NN	LFE-N	135.0 ± .0 8 mm	160.0 + .16/-0 mm	20.25 mm	Nitrile

FlexiLip Installation

Proper installation tools and techniques must be used to install the seal without damaging the critical sealing areas.

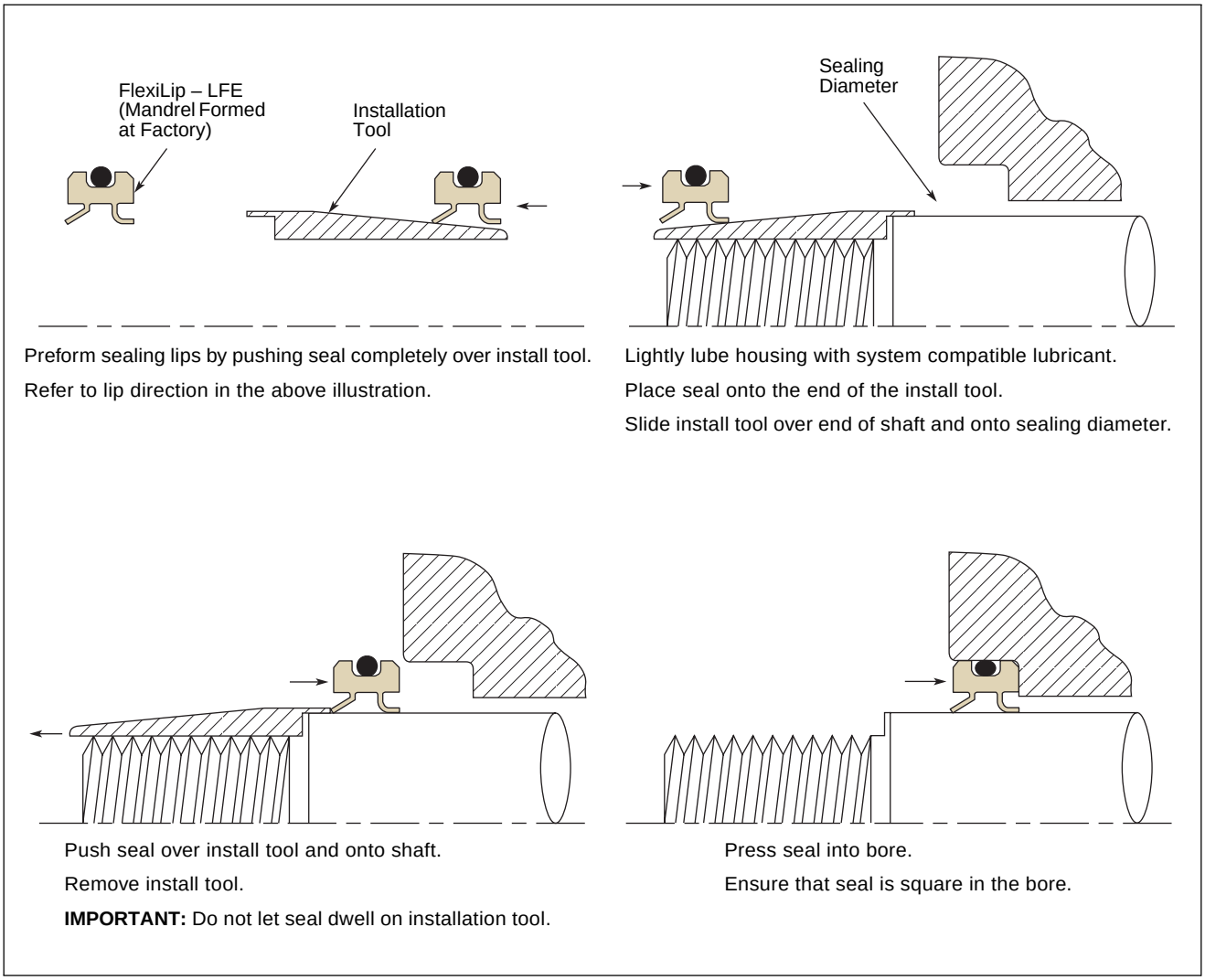

Figure 8-1. FlexiLip Installation

8

Parker Hannifin Corporation
EPS Division
Tel: (801) 972-3000
Fax: (801) 973-4019

FlexiLip Installation Tool

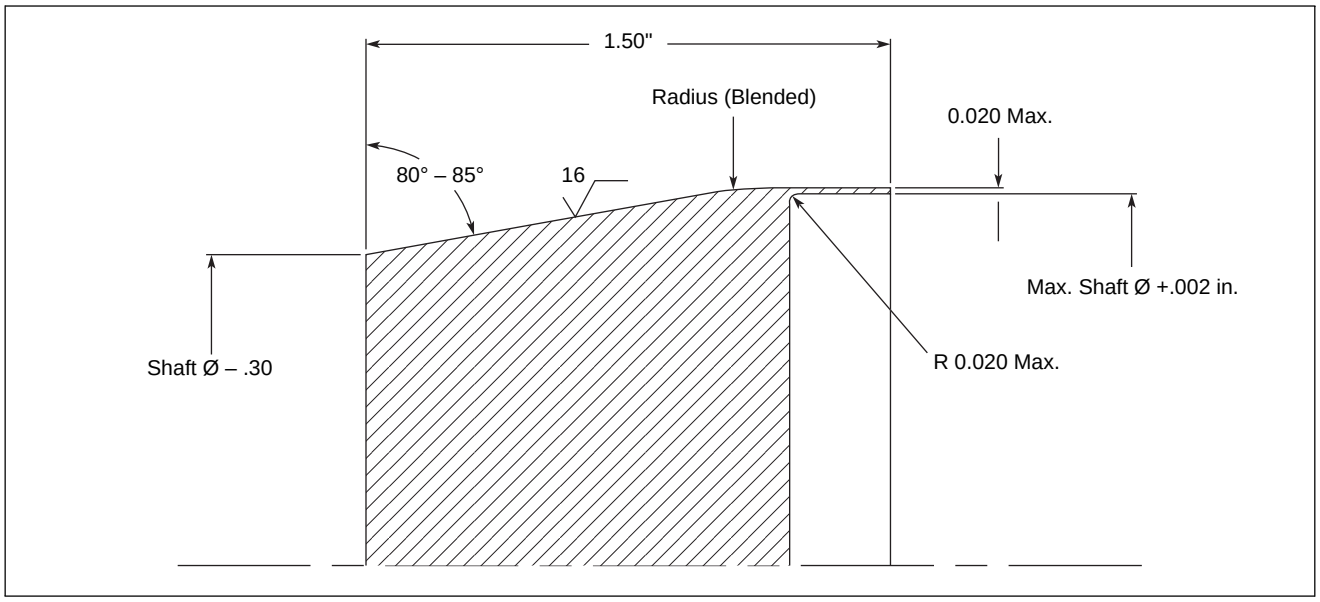

Figure 8-2. Installation Tool Dimensions

Hardware Notes

Each FlexiLip profile is given a standard pressure rating in **Table 8-3** to aid the user in the selection of the most appropriate profile for an application. These pressure ratings are based on the assumptions that there is a large extrusion gap as shown in the first illustration and that the temperature at the gap is less than 300 °F. Tightening the extrusion gap to around 0.015" on non-excluder lip profiles can double or triple the pressure rating for the seal. The extrusion gap for profiles with excluder lips must be at least 0.062" to allow the excluder lip to extend beyond the outside of the seal envelope if necessary. Reducing the extrusion gap does not improve the pressure rating of a seal with an excluder lip.

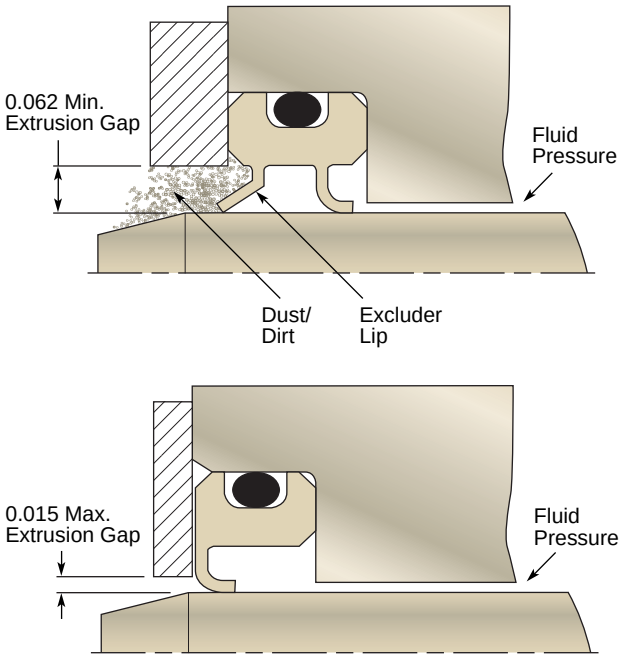

8

01/15/06

Parker Hannifin Corporation
EPS Division
Tel: (801) 972-3000
Fax: (801) 973-4019

Common Materials Used in this Product

The most popular fillers for FlexiLip products are graphite, fiberglass/ molybdenum disulfide, carbon fiber and mineral.

A complete listing of material properties and limitations appears on **Page 3-4**. Feel free to contact the EPS division PTFE Engineering Team at (801) 972-3000 for more guidance on material selection.

0301 — Graphite Filled

Since graphite is often used as a lubricant, it does not significantly increase the coefficient of friction of PTFE when used as a filler. The low friction allows the compound to be used when both shaft speed and pressure are high. Graphite also is chemically inert which enables its use in corrosive medias.

0615 — Proprietary Low Wear PTFE

This proprietary filled PTFE offers low wear and friction properties, used in general applications where long life is required. Not recommended for applications with abrasive media.

0204 — Molybdenum Disulfide and Fiberglass Filled

Molybdenum disulfide increases the hardness of the seal surface while decreasing friction. It is normally used in small proportions combined with other fillers such as glass. MoS_2 is also inert towards most chemicals.

0512 — Carbon Fiber Filled

Carbon fiber lowers creep, increases flex and compressive modulus and raises hardness. Coefficient of thermal expansion is lowered and thermal conductivity is higher for compounds of carbon fiber filled PTFE. Ideal for automotive applications in shock absorbers and water pumps.

0127 — Mineral Filled

Mineral is ideal for high temperatures and offers low abrasion to soft surfaces. PTFE with this filler can easily be qualified to FDA and other food-grade specifications.

Parker Hannifin Corporation
EPS Division
Tel: (801) 972-3000
Fax: (801) 973-4019

The key application considerations that help in the selection of the right FlexiLip profile are operating temperature, media abrasiveness, pressure, external contamination, friction requirements, shaft diameter and Total Indicator Runout (TIR).

Total Indicator Runout (TIR) is how far the shaft is misaligned with the bore during rotation. This is fully characterized in the general engineering section on **Page 2-19**. Only one FlexiLip profile is able to handle continuous service with runout conditions up to 0.020"; the LGN-N (or the LGN-S with the steel band). Keep in mind that the faster a shaft spins, the less TIR the seal can withstand.

If the temperatures are extreme or if the shaft is over 4 inches in diameter, Parker recommends using a profile with a stainless steel band inserted into the side for dimensional stability during thermal cycling. This standard design can be called out by switching the "-N" for a "-S" in the profile code (and the part number).

These decision trees are to be used as an engineering guide only. Often several other parameters must be considered to optimize seal design. Contact Parker's PTFE Engineering Team for confirmation of your choice or further recommendations. Parker also recommends that any seal be tested in the application conditions before releasing for production.

Decision Trees

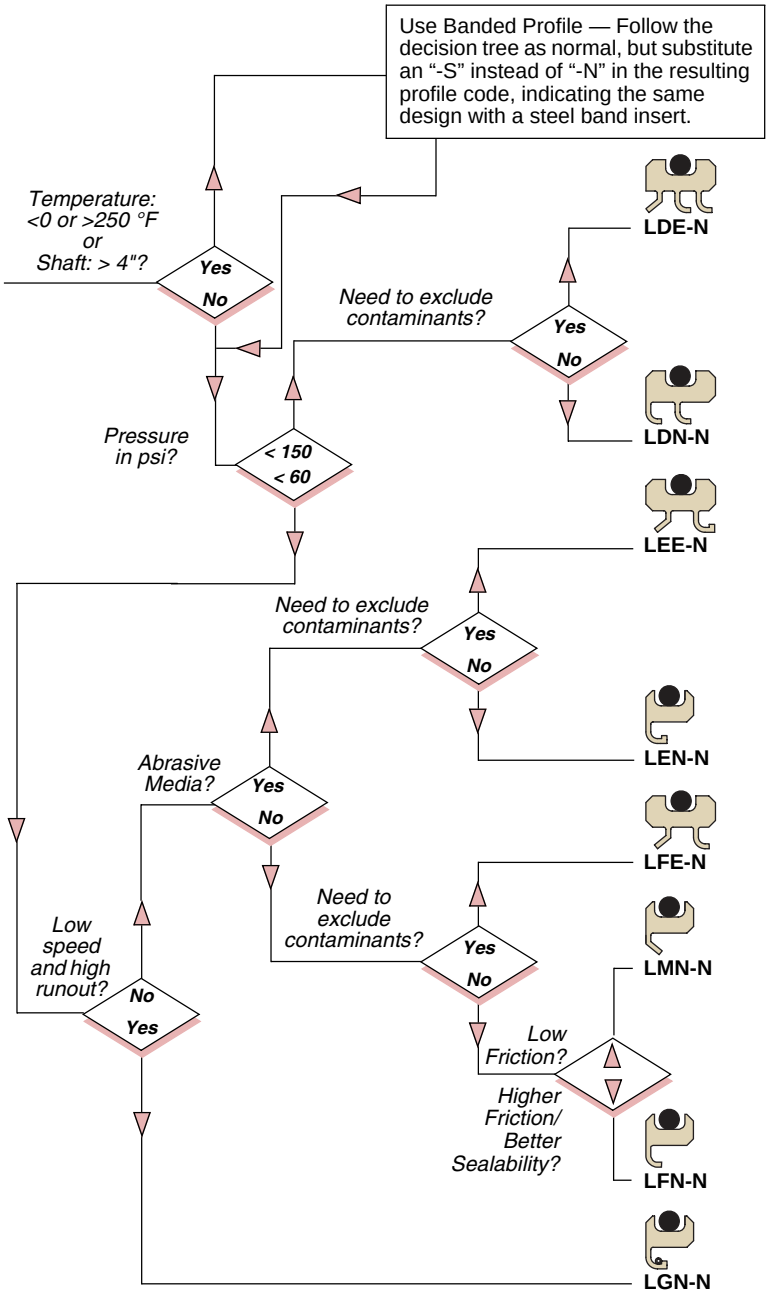

02/15/08

Parker Hannifin Corporation
EPS Division
Tel: (801) 972-3000
Fax: (801) 973-4019

Profiles

Table 8-3. Product Profiles

Standard Profile	Banded Profile*	Features	Recommended Applications
LFN-N 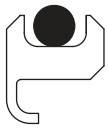	**LFN-S** 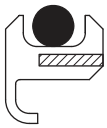	Formed Primary Lip	Multipurpose Seal
LFE-N 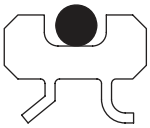	**LFE-S** 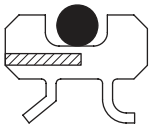	Formed Primary Lip w/ Excluder Lip	Multipurpose Seal
LMN-N 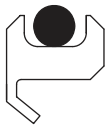	**LMN-S** 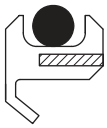	Machined Primary Lip	Low Friction
LEN-N 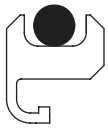	**LEN-S** 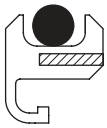	Elf-Toe Primary Lip	Abrasive Media
LEE-N 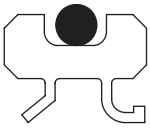	**LEE-S** 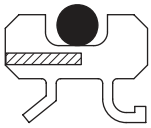	Elf-Toe Primary Lip w/ Excluder Lip	Abrasive Media
LDN-N 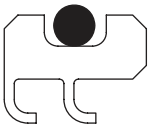	**LDN-S** 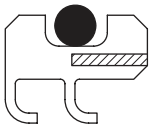	Dual Primary Lips	Oil Seal — Flooded, Severe Splash
LDE-N 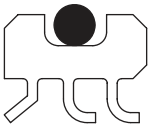	**LDE-S** 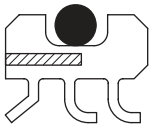	Dual Primary Lips w/ Excluder Lip	Oil Seal — Flooded, Severe Splash
LGN-N 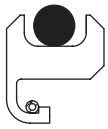	**LGN-S** 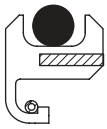	Primary Lip Energized with Garter Spring	0.010" > TIR > 0.005"

*Metal Banded — 301 Stainless Steel. For use when temperature is <0 or >250 °F or shaft diameter ≥4.000".
**Consult engineering for shaft diameters that are outside the range of our standards.
***Seals that are retained with an extrusion gap smaller than 0.020" will go to higher pressures than listed. Consult EPS Division Engineering.

02/15/08

Parker Hannifin Corporation
EPS Division
Tel: (801) 972-3000
Fax: (801) 973-4019

Shaft Diameter**	Cross-Section (Min.)	Height (Min.)	Pressure (Max.)***	Surface Speed (Max.)	Friction Rating (1 – 5 with 1 Best)
0.625 to 12"	Standard 0.250" Banded 0.312"	Standard 0.250" Banded 0.312"	60 psi	5000 sfpm	2
0.750 to 12"	Standard 0.250" Banded 0.375"	Standard 0.312" Banded 0.375"	60 psi	5000 sfpm	3
0.750 to 12"	Standard 0.250" Banded 0.312"	Standard 0.250" Banded 0.312"	30 psi	6000 sfpm	1
0.750 to 12"	Standard 0.250" Banded 0.375"	Standard 0.250" Banded 0.312"	60 psi	5000 sfpm	3
0.750 to 12"	Standard 0.250" Banded 0.375"	Standard 0.312" Banded 0.375"	60 psi	5000 sfpm	4
0.750 to 12"	Standard 0.250" Banded 0.375"	Standard 0.312" Banded 0.375"	150 psi	5000 sfpm	4
0.750 to 12"	Standard 0.250" Banded 0.437"	Standard 0.437" Banded 0.437"	150 psi	5000 sfpm	5
0.750 to 12"	Standard 0.250" Banded 0.312"	Standard 0.250" Banded 0.312"	60 psi	2000 sfpm	4

02/15/08

Parker Hannifin Corporation
EPS Division
Tel: (801) 972-3000
Fax: (801) 973-4019

Notes

Parker Hannifin Corporation
EPS Division
Tel: (801) 972-3000
Fax: (801) 973-4019
www.parker.com/eps

FlexiCase™ Rotary Seals
Introduction

Conter

Engineer
Materials
Product

DISCONTINUED

FlexiCase™ Products have been discontinued as a standard (catalog) offering from Parker EPS Division effective 12/2020.

To find your local Authorized Distributor that may offer a substitute product, click on the "Where to Buy" link or visit

www.parker.com/eps/wheretobuy

WHERE TO BUY

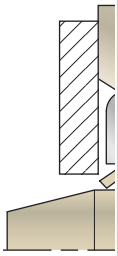

eatures an
casing on
ket is
can to seal
ng-
an a rotary
h higher

ty of PTFE
s. Standard
d
tween
olled steel
gasket,
nearly all
e profiles
d
ng
d the

r a wide

ability
mers in a

ocessing
c
s
l

9

01/15/06

Parker Hannifin Corporation
EPS Division
Tel: (801) 972-3000
Fax: (801) 973-4019

Part Number Nomenclature — FlexiCase

Table 9-1. FlexiCase Part Number Nomenclature

English

0 **5** … **S**

4-Digit M
Example
0502 = C
F
0301 = G
P

…tion

Metric

M **5** … **S**

4-Digit Mate
Examples:
M502 = Car
Fille
M301 = Gra
PTI
(“M” indicat

…rial

…KM)

…nation

DISCONTINUED

FlexiCase™ Products have been discontinued as a standard (catalog) offering from Parker EPS Division effective 12/2020.

To find your local Authorized Distributor that may offer a substitute product, click on the “Where to Buy” link or visit

www.parker.com/eps/wheretobuy

WHERE TO BUY

01/15/06

Parker Hannifin Corporation
EPS Division
Tel: (801) 972-3000
Fax: (801) 973-4019

DISCONTINUED

FlexiCase™ Products have been discontinued as a standard (catalog) offering from Parker EPS Division effective 12/2020.

To find your local Authorized Distributor that may offer a substitute product, click on the "Where to Buy" link or visit

www.parker.com/eps/wheretobuy

WHERE TO BUY

Choos

From Gl

Step 1 —
for your a
table on
3-charac
number a

Choi

Step 2 —
material
materia

Choi

Step 3 —
best gasl
chemical
Consult t
5700A/U
choose th
in the pa

Choi

Step 4 —
Page 9-6
applicatio
as showr

Choi

Step 5 —
Choose t
limitation
(**Pages 9**
as showr

Choi

Calcu
input
(3.12
round
0301CF

Input
0301CF

epth

0.025 Max.

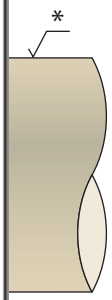

Note: For more specific information on surface finish refer to **Table 2-6** on **Page 2-9**.

Pages 9-8
num seal
ut you can
n
l bore
y width

sions
part number:

9-2
plunge
nish
art number:

on)
5"
9-2

number:

min. bore depth = 0.437"

01/15/06

Parker Hannifin Corporation
EPS Division
Tel: (801) 972-3000
Fax: (801) 973-4019

Table 9-2. Bore Tolerance

Bore Ø	Bore Tolerance	Max. Housing Radius	Metric Bore Ø	Bore Tolerance	Max. Housing Radius
Up to 3"					
3.001 to 6					
6.001 to 8					
8.001 to 9					
9.001 to 1(					

Table 9-3. P

	Gasket Material
0204CEN43	FKM
0301CJE501	Nitrile
M127CDN09	Nitrile
M615CFE12	EPDM

FlexiCas

Proper i e critical sealing area

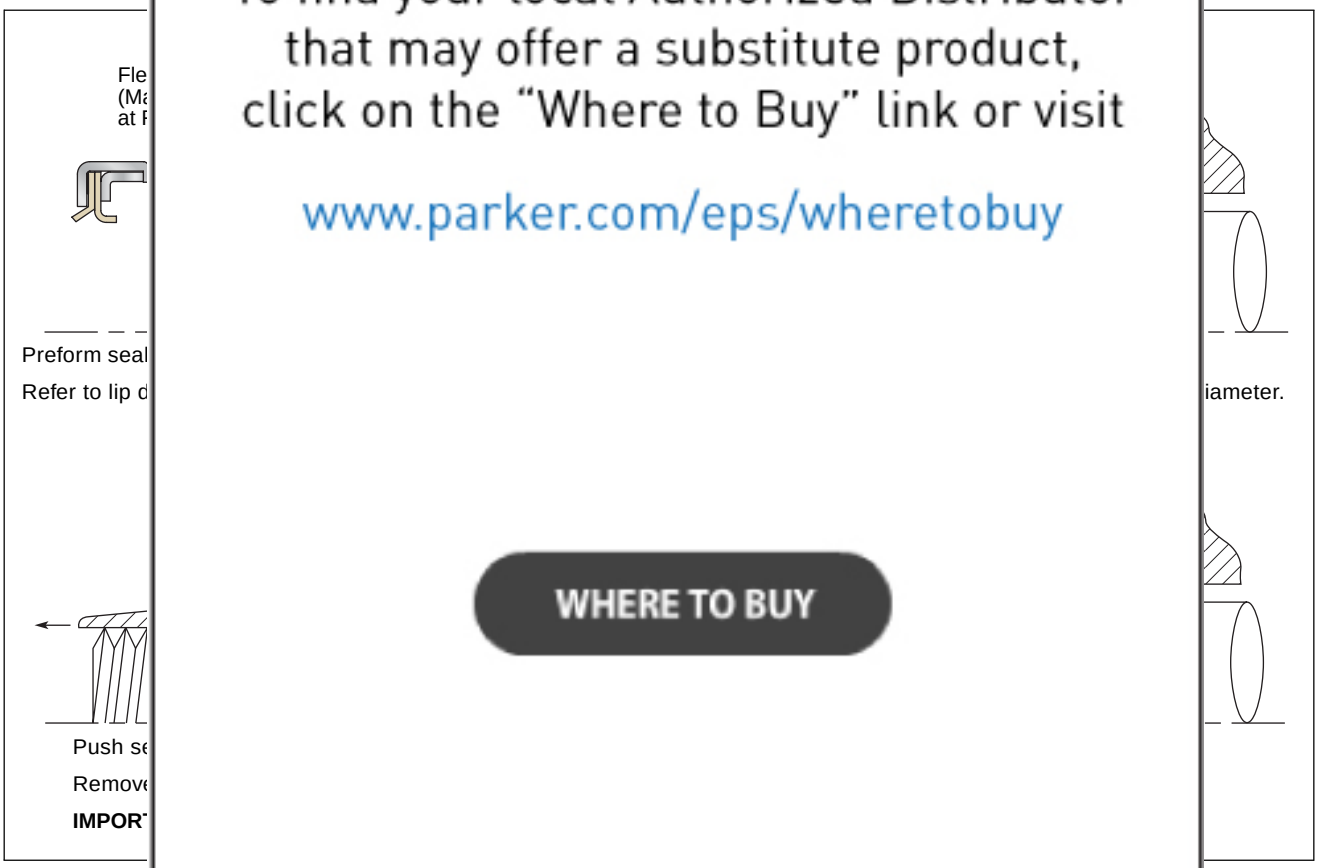

Figure 9-1.

DISCONTINUED

FlexiCase™ Products have been discontinued as a standard (catalog) offering from Parker EPS Division effective 12/2020.

To find your local Authorized Distributor that may offer a substitute product, click on the "Where to Buy" link or visit

www.parker.com/eps/wheretobuy

WHERE TO BUY

9

01/15/06

Parker Hannifin Corporation
EPS Division
Tel: (801) 972-3000
Fax: (801) 973-4019

FlexiCase Installation Tool

002 in.

DISCONTINUED

FlexiCase™ Products have been discontinued as a standard (catalog) offering from Parker EPS Division effective 12/2020.

To find your local Authorized Distributor that may offer a substitute product, click on the "Where to Buy" link or visit

www.parker.com/eps/wheretobuy

WHERE TO BUY

Figure 9-

9

01/15/06

Parker Hannifin Corporation
EPS Division
Tel: (801) 972-3000
Fax: (801) 973-4019

Commor
Product

The mo
are graphite
carbon fibe

A comp
limitations a
contact the
at (801) 97
selection.

0301 — Gra

Since graph
not significa
of PTFE wh
allows the c
speed and
chemically i
medias.

0615 — Pro

This proprie
friction prop
where long
applications

0204 — Mol

Molybdenur
the seal sur
normally us
other fillers
most chemi

and
s.
d and
nds of
tive
pumps.

ratures
TFE
A and

600 °F.

rrous
st-

to
s steel.

ial.
hen

DISCONTINUED

FlexiCase™ Products have been discontinued as a standard (catalog) offering from Parker EPS Division effective 12/2020.

To find your local Authorized Distributor that may offer a substitute product, click on the "Where to Buy" link or visit

www.parker.com/eps/wheretobuy

WHERE TO BUY

01/15/07

Parker Hannifin Corporation
EPS Division
Tel: (801) 972-3000
Fax: (801) 973-4019

DISCONTINUED

FlexiCase™ Products have been discontinued as a standard (catalog) offering from Parker EPS Division effective 12/2020.

To find your local Authorized Distributor that may offer a substitute product, click on the "Where to Buy" link or visit

www.parker.com/eps/wheretobuy

WHERE TO BUY

The k
that help
FlexiCas
temperat
pressure
friction re
and Total
see **Tabl**
temperat
friction.

Total
far the sh
during ro
characte
engineer
FlexiCas
continuou
condition
slower th
CJN and
faster a s
seal can

Thes
as an en
several o
considere
Contact F
Team for
further re
recomme
the appli
releasing

CME
CMN
CEE
CEN
CFE
CFN
CGE
CGN
CDE
CDN
CJE
CJN
CHE
CHN

9

Parker Hannifin Corporation
EPS Division
Tel: (801) 972-3000
Fax: (801) 973-4019

Profiles

Table 9-4. Product Profiles

Profile	Friction Rating
CFN 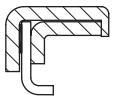	2
CFE 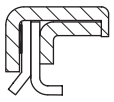	3
CMN 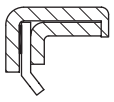	1
CME 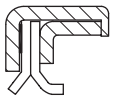	2
CEN 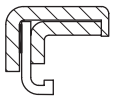	2
CEE 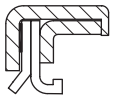	3
CDN 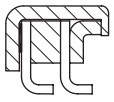	3
CDE 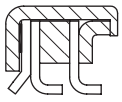	4

*Minimum hei
Engineering f

DISCONTINUED

FlexiCase™ Products have been discontinued as a standard (catalog) offering from Parker EPS Division effective 12/2020.

To find your local Authorized Distributor that may offer a substitute product, click on the "Where to Buy" link or visit

www.parker.com/eps/wheretobuy

WHERE TO BUY

01/15/06

Parker Hannifin Corporation
EPS Division
Tel: (801) 972-3000
Fax: (801) 973-4019

Table 9-5. Product Profiles (Continued)

Profile	Features	Recommended Applications	Shaft Diameter	Cross-Section	Height Limits*	Pressure Limit at	Surface Speed	Friction Rating
CGN								3
CGE								4
CJN								4
CJE								5
CHN								4
CHE 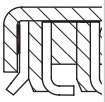								5

DISCONTINUED

FlexiCase™ Products have been discontinued as a standard (catalog) offering from Parker EPS Division effective 12/2020.

To find your local Authorized Distributor that may offer a substitute product, click on the "Where to Buy" link or visit

www.parker.com/eps/wheretobuy

WHERE TO BUY

* Minimum
Engineeri

TFE

9

01/15/06

Parker Hannifin Corporation
EPS Division
Tel: (801) 972-3000
Fax: (801) 973-4019
www.parker.com/eps

Notes

DISCONTINUED

FlexiCase™ Products have been discontinued as a standard (catalog) offering from Parker EPS Division effective 12/2020.

To find your local Authorized Distributor that may offer a substitute product, click on the "Where to Buy" link or visit

www.parker.com/eps/wheretobuy

WHERE TO BUY

Parker Hannifin Corporation
EPS Division
Tel: (801) 972-3000
Fax: (801) 973-4019

Design Action Request Form

NEED HELP? If you need assistance, please photocopy these three pages. Fill out the required information and fax to (801) 973-4019. Use the information below and other information in this catalog to determine the dimensions needed. We will contact you to discuss your specific application and make recommendations. If you need help filling out this form, please call Applications Engineering at (801) 972-3000.

ENGINEERED POLYMER SYSTEMS DIVISION
DESIGN ACTION REQUEST

EPS Division
2220 South 3600 West
Salt Lake City, UT
Tel: (801) 972-3000
Fax: (801) 973-4019

Applications Engineering Use:
Project # _____
Date Entered _____
Date Required _____
Prepared by _____
Territory Mgr. _____
Distributor _____
_____
Dist. Sales _____

Referred by _____
Lead # _____

COMPANY: _____ FAX NUMBER: _____
ADDRESS: _____ P.O. BOX: _____ MAIL STOP: _____
CITY: _____ STATE: _____ ZIP: _____ COUNTRY: _____
CONTACT: _____ TITLE: _____ PHONE: _____ EXT: _____
ALT. CONTACT: _____ TITLE: _____ PHONE: _____ EXT: _____
E-MAIL: _____

EQUIPMENT/MANUFACTURER: _____ MODEL NO.: _____
EXISTING SEAL MANUFACTURER: _____ PART NO.: _____
REASON FOR CHANGE: ☐ PERFORMANCE ☐ DELIVERY ☐ NEW APPLICATION ☐ PRICE
CURRENT PRICE: _____ @ _____ PCS. MONTHLY USAGE: _____ HOURS OPERATION: _____ HOURS SERV. LIFE: _____
TARGET PRICE: _____ @ _____ PCS. QUOTE QTY.: _____ PROTO QTY.: _____ DATE PROTO REQ'D.: _____
SPECIAL INSPECTION REQUIREMENTS: ☐ YES ☐ NO SPECIAL PACKAGING REQUIREMENTS: ☐ YES ☐ NO
EXPLAIN: _____

MOTION

☐ STATIC ☐ RECIPROCATING ☐ OSCILLATORY ☐ ROTARY

PRODUCT TYPE

NON-ROTARY — FILL OUT SECOND PAGE

☐ ROD/SHAFT ☐ WIPER
☐ PISTON ☐ BEARING
☐ INTERNAL FACE ☐ VANE
☐ EXTERNAL FACE ☐ NON-SEAL

ROTARY — FILL OUT THIRD PAGE

☐ SOLID SEAL ☐ PTFE LIP SEAL
☐ SPLIT SEAL ☐ ELASTOMER LIP SEAL
☐ BEARING ISOLATOR

01/15/06

Parker Hannifin Corporation
EPS Division
Tel: (801) 972-3000
Fax: (801) 973-4019

Design Action Request Form

A

OPERATING PARAMETERS	UNIT (CIRCLE ONE)	MINIMUM	OPERATING	MAXIMUM
TEMPERATURE:	°K °F °C			
PRESSURE:	PSI BAR MPA			
STROKE LENGTH (RECIPROCATING):	INCH MM			
CYCLE RATE:	/MIN. /HR. HZ			
DEGREE OF ARC (OSCILLATING):	DEGREES			
VELOCITY:	FT/MIN. MM/MIN.			
VACUUM:	IN HG TORR			

MEDIA TO BE SEALED: _____

☐ **Rod**

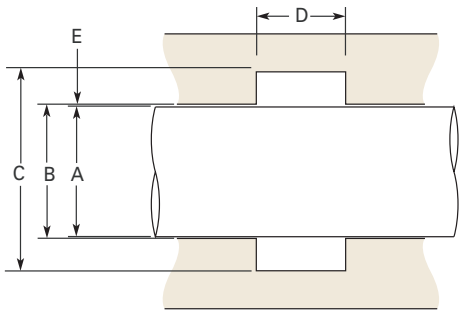

☐ **Piston**

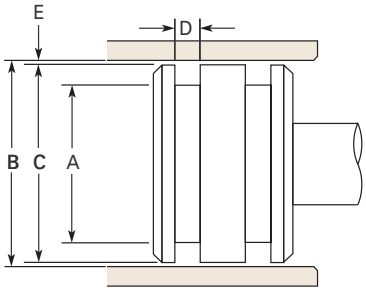

☐ **Face Seal**

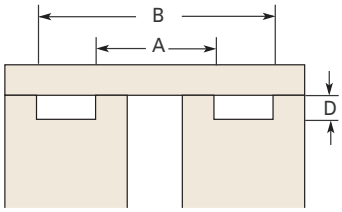

☐ **Other Piston**

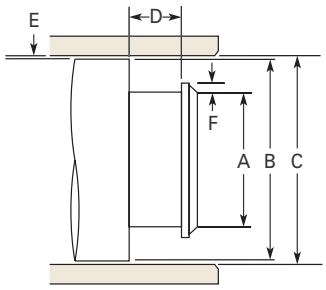

☐ **Other Rod**

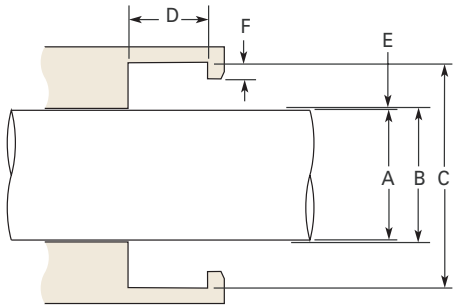

HARDWARE SPECIFICATIONS

HARDWARE DRAWINGS INCLUDED WITH DAR: ☐ YES ☐ NO

A DIAMETER:	MIN. _____	MAX. _____	HARDNESS _____	FINISH _____	MAT'L _____
B DIAMETER:	MIN. _____	MAX. _____	HARDNESS _____	FINISH _____	MAT'L _____
C DIAMETER:	MIN. _____	MAX. _____	HARDNESS _____	FINISH _____	MAT'L _____
D GROOVE WIDTH:	MIN. _____	MAX. _____	CAN HARDWARE BE CHANGED? ☐ YES ☐ NO		
E RADIAL CLEARANCE:	MIN. _____	MAX. _____	HOW? _____		
F ROD / PISTON STEP HEIGHT:	MIN. _____	MAX. _____			

SIDE LOAD (LBS. NEWTONS): _____

MIL-G-5514 O-RING DASH #: _____ BACK-UP WIDTH ____

AS4716 O-RING DASH #: _____ BACK-UP WIDTH ____

GLAND TYPE

____ SPLIT ____ OPEN

____ SOLID ____ STEPPED

METRIC

☐ YES

☐ NO

PERFORMANCE REQUIREMENTS

(CIRCLE ONE)

FRICTION: LBS OZ GMS BREAKOUT ____ DYNAMIC ____

EXPECTED LIFE: CYC HRS YRS _____

MAX. LEAKAGE: DROPS CC/MIN _____

MOST CRITICAL ASPECT: _____

CONTAMINATION: _____

01/15/06

Parker Hannifin Corporation
EPS Division
Tel: (801) 972-3000
Fax: (801) 973-4019

www.parker.com/eps

ROTARY SEALS

SHAFT MOVEMENT
- ☐ CLOCKWISE
- ☐ COUNTERCLOCKWISE
- ☐ BIDIRECTIONAL
- ☐ OSCILLATING

SHAFT POSITION
- ☐ HORIZONTAL
- ☐ VERTICAL UP
- ☐ VERTICAL DOWN

LUBRICATION METHOD
- ☐ OIL SPLASH, OIL LEVEL BELOW SHAFT
- ☐ OIL FLOODED, OIL LEVEL ABOVE SHAFT
- ☐ GREASE W/O PURGE
- ☐ GREASE WITH PURGE ☐ OIL MIST

MEDIA TO SEAL IN: _____ ALLOWABLE LEAKAGE: _____

MEDIA TO SEAL OUT: _____

OPERATING PARAMETERS	**UNIT (CIRCLE ONE)**			MINIMUM	OPERATING	MAXIMUM
TEMPERATURE:	°K	°F	°C	_____	_____	_____
PRESSURE:	PSI	BAR	MPA	_____	_____	_____
FRICTIONAL TORQUE REQUIREMENTS:	in-lb.	Nm		_____	_____	_____

DIMENSIONS LISTED ARE: ☐ INCH ☐ METRIC

SHAFT AXIAL: _____ ± _____ SHAFT TO BORE: _____

A SHAFT: _____ ± _____ B SHAFT: _____

C BORE: _____ ± _____ E DISTANCE TO FIRST: _____

D BORE: _____ ± _____ F DIST. FROM HSG.: _____

SHAFT (RPM): _____ SHAFT FINISH (Ra): _____

SHAFT MATERIAL: _____

BORE (RA): _____ BORE MATERIAL: _____

RUNOUT (TIR): _____

ECCENTRICITY: _____

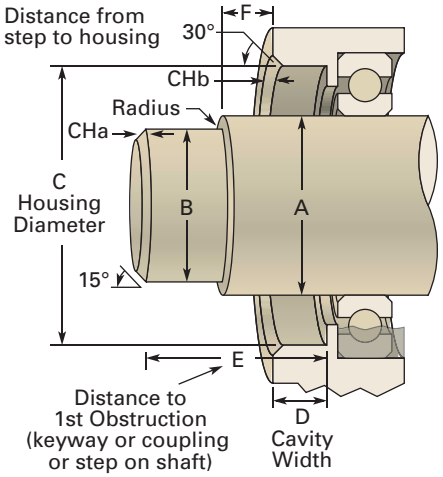

SHAFT FEATURES:
- ☐ KEYWAY ☐ SPLINE ☐ SNAP RING GROOVE ☐ O-RING GROOVE
- ☐ FDA MATERIAL REQUIRED ☐ SEAL NEEDS TO EXCLUDE HIGH PRESSURE WATER SPRAY

SEAL INSTALLATION DATA

INSTALLATION DIRECTION:
- ☐ LIP FACES TOWARDS BEARING
- ☐ LIP FACES AWAY FROM BEARING

SEAL INSTALLED BY: ☐ PUSHING SEAL OVER SHAFT ☐ PUSHING SHAFT THROUGH SEAL

IF SHAFT IS PUSHED THROUGH SEAL:
- ☐ SHAFT DIRECTION OPPOSES LIP DIRECTION
- ☐ SHAFT DIRECTION IS SAME AS LIP DIRECTION

01/15/06

Parker Hannifin Corporation
EPS Division
Tel: (801) 972-3000
Fax: (801) 973-4019
www.parker.com/eps

A

Notes

Parker Hannifin Corporation
EPS Division
Tel: (801) 972-3000
Fax: (801) 973-4019

www.parker.com/eps

Problem Solved — Case Studies

This section is filled with real-world applications for which Parker has designed a successful solution. The following solutions illustrate the wide capability of PTFE sealing in various applications.

FlexiSeal™ Applications

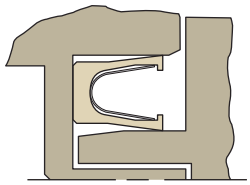

Robotic Arm — Wafer Press

Motion:	Oscillatory
Rotation:	60°
Speed:	16 sfpm
Pressure:	0.5 Torr – 14.5 psi
Temperature:	68 to 77 °F
Media:	Vacuum/Atmosphere
Life:	2,500,000 cycles
Breakaway Friction:	2 in/oz max. (Repeatable)
Allowable Leakage:	Zero
Dynamic Surface:	4 R_a Electrolysis Nickel/Aluminum 70 R_c
Static Surface:	16 R_a Electrolysis Nickel/Aluminum 70 R_c
Spring Material:	301 Stainless Steel (Cantilever)
Jacket Material:	Ekonol Filled PTFE (Aromatic Polyester Filled PTFE)

Parker Hannifin Corporation
EPS Division
Tel: (801) 972-3000
Fax: (801) 973-4019

FlexiSeal™ Applications (Continued)

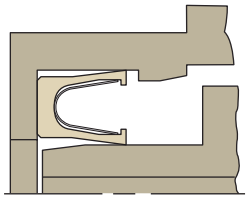

Plasma Generator

Motion:	Reciprocating (Rod)
Stroke:	0.040 – 0.080"
Frequency:	90 cycles/hr.
Pressure:	20 MTorr – 14.7 psi
Temperature:	70 to 150 °F
Media:	Vacuum/Atmosphere
Life:	750,000 Cycles
Breakaway Friction:	Repeatable
Allowable Leakage:	Zero
Dynamic Surface:	4 R_a Sapphire or Quartz Tube
Static Surface:	16 R_a Aluminum
Spring Material:	301 Stainless Steel (Cantilever)
Jacket Material:	UHMWPE

UHMWPE FlexiSeal for this semiconductor application is best suited for the cleanliness demands and vacuum requirements.

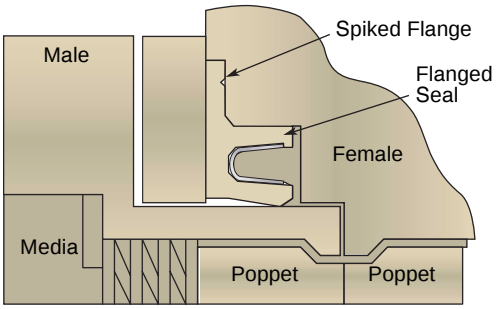

Liquid Oxygen Quick Disconnect

Motion:	Reciprocating (Rod)
Stroke:	0.500"
Frequency:	1 – 50 cycles/day
Pressure:	0 – 60 psi
Temperature:	-320 to +120 °F
Media:	Liquid Oxygen
Dynamic Friction:	5 lbs. Force max.
Allowable Leakage:	Zero
Spring Material:	301 Stainless Steel (Cantilever)
Jacket Material:	Virgin PTFE

- Quick Coupling to transfer and refill LOX home and portable units.
- Flanged spiked for sealability and to prevent seal shrinkage during thermal cycling.

01/15/06

Parker Hannifin Corporation
EPS Division
Tel: (801) 972-3000
Fax: (801) 973-4019
www.parker.com/eps

B

FlexiSeal™ Applications (Continued)

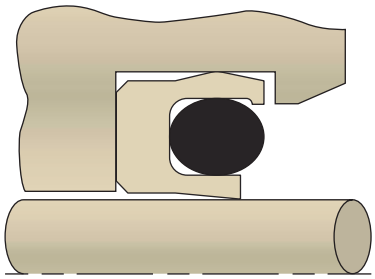

Biomedical Liquid Handling Systems

Motion: Reciprocating (Rod)
Stroke: 0 – 0.500"
Frequency: 60 Hz
Pressure: Vacuum
Temperature: 50 to 100 °F
Media: Dimethyl Sulfoxide
Life: 500,000 Cycles
Breakaway Friction: Repeatable
Allowable Leakage: Zero
Dynamic Surface: 4 R_a 303 Stainless Steel (Plunger) 20 R_c
Static Surface: Chem Film (Yellow) Aluminum
Energizer Material: Fluorocarbon
Jacket Material: Virgin PTFE

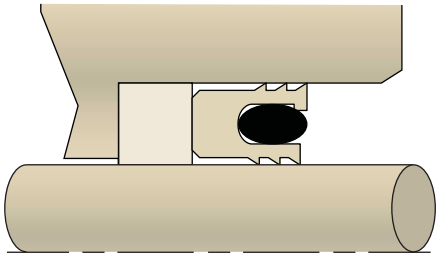

Liquid Dispensing Cylinder

Motion: Reciprocating (Rod)
Stroke: 2.000 – 4.000"
Frequency: 1 – 4 cycles/min.
Pressure: 200 – 3000 psi
Temperature: -60 to +180 °F
Media: Epoxy, Adhesives and Catalysts
Life: 1,000,000 Cycles
Allowable Leakage: Zero
Dynamic Surface: 8 – 16 R_a Steel (Chrome) 60 – 65 R_c
Static Surface: 32 R_a Aluminum
Energizer Material: EPDM
Jacket Material: UHMWPE

01/15/06

Parker Hannifin Corporation
EPS Division
Tel: (801) 972-3000
Fax: (801) 973-4019

FlexiSeal™ Applications (Continued)

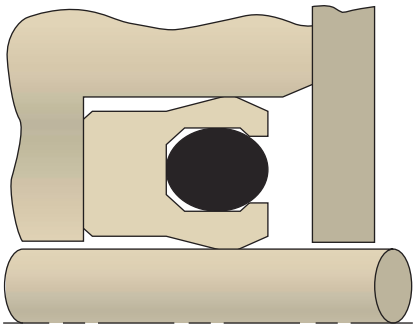

High Pressure Washers — Axial Pump

Motion:	Reciprocating (Rod)
Stroke:	0.250"
Frequency:	3,450 cycles/min.
Speed:	1,725 sfpm
Pressure:	0 – 3,000 psi
Temperature:	35 to 160 °F
Media:	Water
Life:	2,000 – 8,000 Hrs.
Allowable Leakage:	2 drops/Hr.
Dynamic Surface:	6 – 10 R_a (55 – 60 R_c) 440C Stainless Steel
Static Surface:	120 R_a Brass
Jacket Material:	Carbon Fiber Filled PTFE
O-Ring Material:	Nitrile

A commercial power washer manufacturer was seeking high pressure seal which would meet 8000 hour requirement. Elastomer energized FlexiSeal provided a best-value solution. Carbon fiber-filled provided the life requirement in this non-lubricated environment.

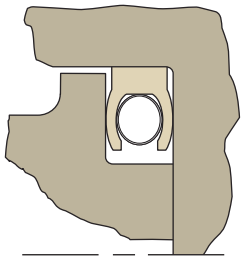

Gas Turbine Gear Box and Bearing Compartment Static Seals

Motion:	Static Face Seal
Pressure:	ΔP = -30 to 200 psi
Temperature:	65 to 400 °F
Media:	MIL-L-23699, MIL-L-7808 or Oil/Air Mixture
Life:	5,000 Hrs.
Allowable Leakage:	Zero
Static Surface:	32 R_a Titanium and 63 R_a Nickel Alloy
Jacket Material:	Virgin PTFE
Spring Material:	Tempered Elgiloy® (Helical)

Aerospace engine manufacturers utilize high temperature FlexiSeals where standard O-ring compounds fail to meet the required temperature ranges and life requirements. Excellent compatibility is achieved with use of virgin PTFE.

01/15/06

Parker Hannifin Corporation
EPS Division
Tel: (801) 972-3000
Fax: (801) 973-4019

B

FlexiSeal™ Applications (Continued)

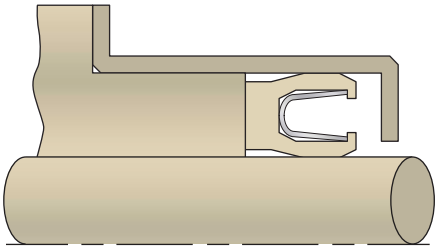

Tank Cleaners

Motion: Rotates on ID and OD
RPM: 20 – 40
Pressure: 50 – 1000 psi
Temperature: 32 to 220 °F
Media: Water/Detergents, Solvents, Abrasive Compounds
Speed: 2.7 sfpm
Allowable Leakage: Zero
Dynamic Surface: 16 R_a 17 – 4PH HT (Shaft) 45 R_c
32 R_a 316 Stainless Steel (Bore) 28 R_c
Static Surface: 32 R_a 316 Stainless Steel
Spring Material: Elgiloy (Cantilever)
Jacket Material: PPS/Carbon Fiber Filled PTFE
Bearing Material: Carbon Fiber Filled PPS

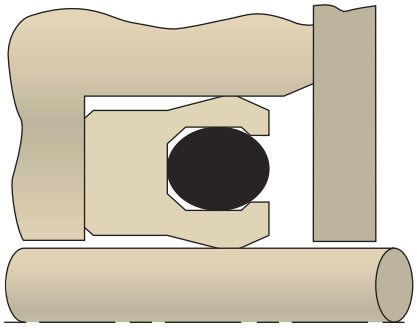

Carpet Steam Cleaner — Pump

Motion: Rotary Shaft
RPM: 13,000
Speed: 425 sfpm
Pressure: 20" Hg Vacuum to 10 psi
Temperature: 70 to 100 °F
Media: Exposure to Cleaning Solutions
Friction: Low (Continuous Dry Run)
Life: 300 – 500 Hrs.
Allowable Leakage: Zero (Air)
Dynamic Surface: 10 – 30 R_a 303 Stainless Steel (Shaft)
20 R_c
Static Surface: 32 R_a Plastic Housing
Jacket Material: Carbon Fiber Filled PTFE
O-Ring Material: Nitrile

01/15/06

Parker Hannifin Corporation
EPS Division
Tel: (801) 972-3000
Fax: (801) 973-4019

B

FlexiLip™ Applications

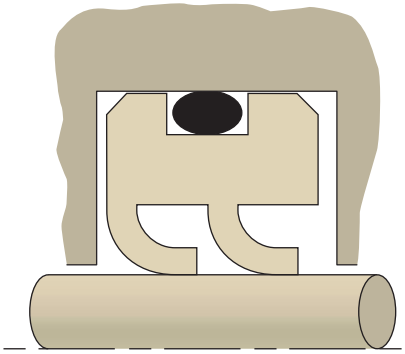

Air Conditioning Compressors

Motion:	Rotary Shaft
Rotation:	CW
RPM:	1725 – 1850
Pressure:	20 – 300 psi
Temperature:	32 to 325 °F
Media:	R12, R22, R500, R502, R134, R404A, R410A
Speed:	260 sfpm
Life:	15,000 Hrs.
Allowable Leakage:	Zero
Seal Material:	Pigmented Virgin PTFE

The LDN FlexiLip profile is often selected for use as a compressor shaft seal. The seal material meets compatibility testing with all refrigerants in conjunction with high-speed, long life application requirements. Meets EPA zero leakage requirements.

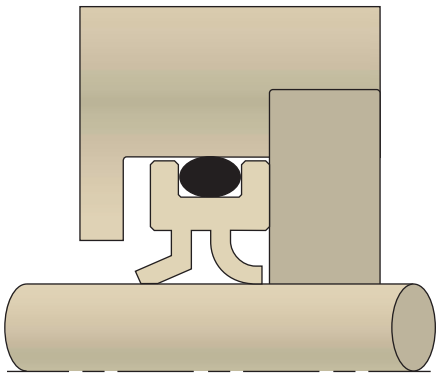

Transportation — Supercharger

Motion:	Rotary Shaft
RPM:	14,000 max.
Pressure:	19 – 25 in vacuum, 10 – 12 psi boost
Temperature:	220 °F
Media:	Sealed In — Synthetic Oil, GL5, 75W Sealed Out — Atmosphere
Velocity:	3100 sfpm
Allowable Leakage:	None
Dynamic Surface:	Case Hardened Steel, 16 R_a 60 R_c
Static Surface:	Cast Aluminum, 32 R_a
Seal Materials:	Glass/Moly Filled PTFE with Fluorocarbon O-Ring

01/15/06

Parker Hannifin Corporation
EPS Division
Tel: (801) 972-3000
Fax: (801) 973-4019
www.parker.com/eps

B

FlexiLip™ Applications (Continued)

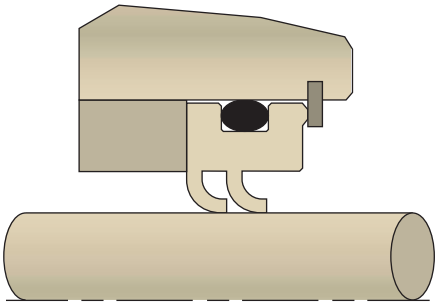

Transportation — Universal Joint

Motion: Rotary — Oscillating
RPM: 250 – 500
Temperature: Ambient
Media: Sealed In — Grease
Sealed Out — Dust
Velocity: 150 – 300 sfpm
Allowable Leakage: None
Dynamic Surface: 4140, 10 – 20 R_a 50 R_c
Static Surface: 4140, 10 – 20 R_a 50 R_c
Seal Material: Graphite Filled PTFE with Fluorocarbon O-Ring

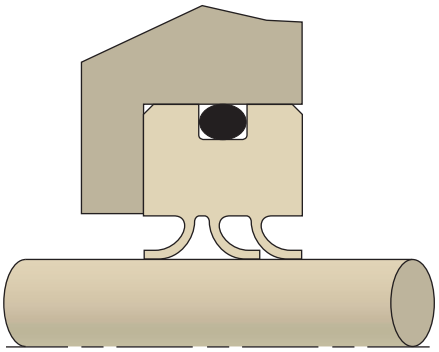

Industrial — Gearbox

Motion: Rotary Shaft
Rotation: CW/CCW (Bi-directional)
RPM: 200 – 1800
Pressure: 5 psi
Temperature: Ambient
Media: Sealed In — Gear Oil
Sealed Out — Water Washdown
Velocity: 110 – 1020 sfpm
Allowable Leakage: None
Dynamic Surface: 440 Stainless Steel, 10 – 20 R_a 15 R_c
Static Surface: Cast Iron, 63 R_a
Seal Materials: Proprietary Filled PTFE with Fluorocarbon O-Ring

01/15/06

Parker Hannifin Corporation
EPS Division
Tel: (801) 972-3000
Fax: (801) 973-4019

B

FlexiCase™ Applications

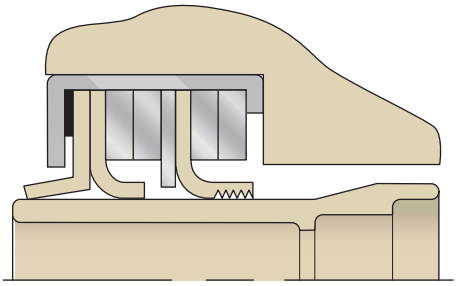

Stationary and Portable Air Compressors

Motion:	Rotary Shaft
Rotation:	CW/CCW (Bi-directional)
RPM:	1780 – 3600
Speed:	1650 sfpm
Pressure:	30 – 175 psi
Vacuum:	28 Hg
Temperature:	-40 to +250 °F
Media:	Silicone/Polyglycol, Diester, Hydrocarbon SHC Lube Oils
Life:	15,000 Hrs.
Allowable Leakage:	Zero
Shaft Surface:	16 – 20 R_a Steel 30 – 36 R_c
Seal Material:	Carbon Fiber Filled PTFE
Case Material:	S.A.E. 1008/1020 CRS

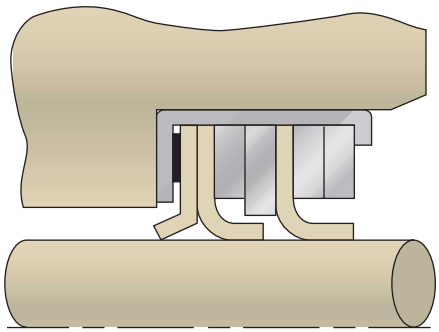

Hydraulic Gear Pumps and Motors

Motion:	Rotary Shaft
Rotation:	CW/CCW (Bi-directional)
RPM:	1750 – 3000
Pressure:	100 – 250 psi
Temperature:	-30 to +250 °F
Media:	S.A.E. 10W Hydraulic Oil
Speed:	612 spfm
Life:	500 – 1000 Hrs.
Allowable Leakage:	1 drop/Hr.
Dynamic Surface:	12 R_a Hardened Steel 58 – 62 R_c
Static Surface:	32 R_a Cast Iron or Aluminum
Seal Material:	Carbon/Graphite Filled PTFE
Case Material:	S.A.E. 1008/1020 CRS

A gear pump manufacturer looking for increasing longevity selected CHE profile FlexiCase featuring redundant sealing lips and wiper/scraper. Seal material provided increased wear resistance to achieve 1000 hour requirement.

Parker Hannifin Corporation
EPS Division
Tel: (801) 972-3000
Fax: (801) 973-4019

B

FlexiCase™ Applications (Continued)

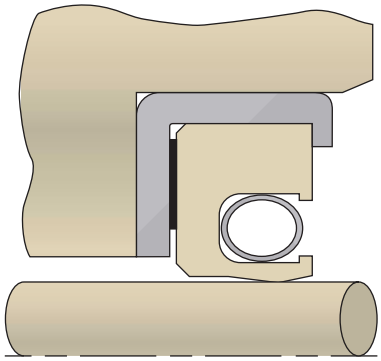

Freon Recovery System — Compressor

Motion:	Rotary Shaft
Rotation:	CW
RPM:	1725 – 1850
Pressure:	20 – 300 psi
Temperature:	32 to 325 °F
Media:	R12, R22, R500, R502, R134, R404A, R410A
Speed:	250 sfpm
Life:	1,000 – 1,500 Hrs.
Allowable Leakage:	Zero
Dynamic Surface:	8 R_a Tool Steel 58 – 62 R_c
Static Surface:	16 R_a Aluminum
Seal Material:	Glass/Moly Filled PTFE
Case Material:	304 Stainless Steel

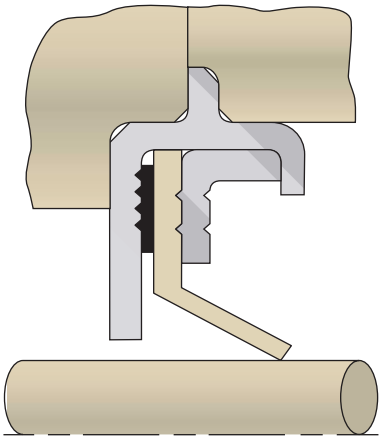

Gas Turbine — Engine Sump

Motion:	Rotary Shaft
RPM:	8,000 – 8,700
Speed:	14,300 – 15,500 sfpm
PV:	77,400
Pressure:	0 – 5 psi
Temperature:	-65 to +250 °F
Media:	MIL-L-23699/MIL-L-7808/Hot Air
Leakage:	Zero (Static)
Dynamic Surface:	20 R_a Chromium Carbide 60 – 70 R_c
Static Surface:	125 R_a Type III Anodized Aluminum
Life:	10,000 Hrs.
Seal Lip Material:	Carbon/Graphite Filled PTFE
Cases:	Inner/Outer — Aluminum AMS 4016/4150
Gasket:	Fluorocarbon

01/15/06

Parker Hannifin Corporation
EPS Division
Tel: (801) 972-3000
Fax: (801) 973-4019
www.parker.com/eps

FlexiCase™ Applications (Continued)

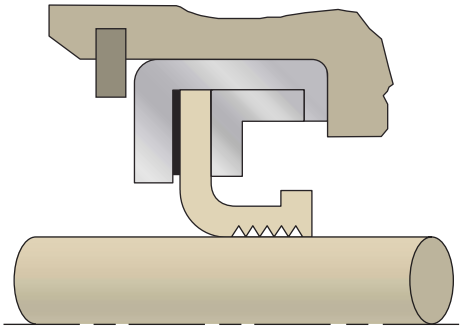

Gas Turbine — Scavenge Pump Line

Motion:	Rotary Shaft
RPM:	8,000
Speed:	1,450 sfpm
Pressure:	45 psi
PV:	65,250
Temperature:	-65 to +425 °F
Media:	MIL-L-23699/MIL-L-7808/Hot Air
Leakage:	Zero
Dynamic Surface:	16 R_a Type III Anodized Aluminum
Static Surface:	60 – 70 R_c
Life:	10,000 Hrs.
Seal Lip Material:	Carbon Fiber Filled PTFE, Uni-directional Hydro Lip
Cases:	Inner/Outer — 304 Stainless Steel
Gasket:	Fluorocarbon

Parker Hannifin Corporation
EPS Division
Tel: (801) 972-3000
Fax: (801) 973-4019

Chemical Compatibility

Medias	PTFE	UHMW PE	TPE	301 SS	Hast C-276	Elgiloy
Acetaldehyde	A	C	—	A	A	A
Acetamide	A	A	—	B	—	—
Acetate solvent	A	A	—	A	A	A
Acetic acid	A	A[2]	A	D	A	A
Acetic acid, 20%	A	A	A	B	A	A
Acetic acid, 80%	A	D	—	D	A	A
Acetic acid, Glacial	A	D	—	C	A	A
Acetic anhydride	A	D	B	B	A	A
Acetone	A	B	B	A	A	A
Acetyl chloride (dry)	A	D	—	A	A	A
Acetylene	A	D	A	A	—	A
Acrylonitrile	A	A	—	A[1]	B	—
Adipic acid	A	A	—	A[1]	—	—
Alcohols:						
Amyl	A	B[2]	A	A	A	A
Benzyl	A	D	—	A	A	A
Butyl	A	A	—	A	A	A
Diacetone	A	B[1]	—	A	A	A
Ethyl	A	B	A	A	A	A
Hexyl	A	A	—	A	A	A
Isobutyl	A[2]	A[2]	—	A	A	A
Isopropyl	A[2]	A[2]	A	B	A	A
Methyl	A	A[1]	B	A	A	A
Octyl	—	A	—	A	C	A
Propyl	A	A[2]	—	A	A	A
Aluminum chloride	A	B[2]	C	B	A	B
Aluminum chloride, 20%	A	B[2]	—	D	A	C
Aluminum fluoride	A	A[2]	—	D	B	C
Aluminum hydroxide	A	A[2]	—	A[1]	B	—
Aluminum nitrate	A	A[2]	—	A	—	—
Alum. Potassium sulfate	A	A[2]	—	D	C	—
Aluminum sulfate	A	A[2]	B[1]	B	B	—
Alums	A	A	D	—	B	—
Amines	A[2]	C[1]	A[1]	A	B	A
Ammonia 10%	A	C[1]	—	A	A	A
Ammonia nitrate	A	A	—	A	—	A
Ammonia, anhydrous	A	B[2]	D	A	B	A
Ammonia, liquid	A	C[1]	—	B[2]	B	B
Ammonium acetate	A	A	—	B	—	—
Ammonium bifluoride	A	A[2]	—	D	B	C
Ammonium carbonate	A	B[2]	—	B	B	—
Ammonium chloride	A	A[2]	A[1]	C	D	A
Ammonium hydroxide	A	A[1]	C	A[1]	B	A
Ammonium nitrate	A	A[1]	B[1]	A[1]	B	—
Ammonium persulfate	A[1]	A[2]	—	A	B	—
Ammonium phosphate:						
Dibasic	A[2]	A[2]	—	B	B	—
Mono-basic	A	A	B[1]	B	B	—
Tribasic	A	C	—	B	B	—
Ammonium sulfate	A	A[1]	B[1]	B	B	A
Amyl acetate	A	C[1]	C[1]	A	A	—
Amyl chloride	A	D	—	A[2]	A[1]	—
Aniline	A	C	D	A	B	—
Aniline hydrochloride	A	D	—	D	D	—

Medias	PTFE	UHMW PE	TPE	301 SS	Hast C-276	Elgiloy
Antimony trichloride	A	B[2]	—	D	—	—
Aqua regia	A	B[1]	—	D	C	D
Arochlor 1248	A	C[1]	C[1]	B	A	—
Aromatic hydrocarbons	—	C	C[1]	—	—	—
Arsenic acid	A	B[2]	—	A[2]	B	—
Asphalt	A[1]	A[1]	B[1]	B	—	—
Barium carbonate	A	B[2]	—	B[1]	B	—
Barium chloride	A	A[1]	B[1]	A[1]	B	—
Barium cyanide	A[1]	B	—	A[1]	A	—
Barium hydroxide	A	B[2]	B[1]	B	B	—
Barium nitrate	A[1]	B[2]	—	B	—	—
Barium sulfate	A	B[2]	D	B	A	—
Barium sulfide	A	B[2]	—	B	—	—
Benzaldehyde	A[1]	A[1]	B	B	A	—
Benzene	A	C[1]	C	B	B	—
Benzenesulfonic acid	A	A[1]	B	B	B	—
Benzoic acid	A[2]	A[1]	D	B	B[1]	—
Benzol	A	C[1]	C	A[1]	B	—
Boric acid	A	A[2]	A[1]	B[2]	A	—
Bromine	A	D	D	D	A	C
Butadiene	A[2]	D	—	A	C	—
Butane	A	C[1]	—	A[2]	A	A
Butyl Acetate	A	C[1]	B	B	A	—
Butylene	A	B[1]	—	A	—	—
Butyric acid	A[2]	D	B[1]	B[2]	A[1]	—
Calcium bisulfide	A	B[1]	B[1]	B	A	—
Calcium carbonate	A	B[1]	—	A[1]	B	—
Calcium chloride	A	B[2]	A[1]	C[2]	A	C
Calcium hydroxide	A	A[2]	B[1]	B[1]	A	A
Calcium hypochlorite	A	A[1]	C[1]	C[1]	B	C
Calcium oxide	A	B[1]	A	A	A	A
Calcium sulfate	A	B[1]	—	B	B	—
Carbon bisulfide	—	—	C[1]	A	—	—
Carbon dioxide	A	A[1]	A	A	A	A
Carbon dioxide (Dry)	A	A[1]	A[1]	A	A	A
Carbon dioxide (Wet)	A	A[1]	—	A	A	A
Carbon disulfide	A	C[1]	—	A[1]	B	—
Carbon monoxide	A	A[2]	A	A	B	A
Carbon tetrachloride	A	D	D	B	A[1]	A
Carbonic acid	A	B[2]	D	A[1]	A[2]	—
Catsup	—	—	—	A	—	A
Chlorinated glue	—	—	—	—	—	—
Chlorine water	A	B[1]	—	C	A[2]	A
Chlorine, anhydrous liquid	A	D	—	C[1]	D	—
Chlorine, dry	A	D	D	A[1]	A[2]	A
Chlorobenzene (Mono)	B	C[1]	D	A	A	—
Chloroform	A[1]	C[1]	D	A	A[1]	A
Chlorosulfonic acid	A	D	D	D	A[1]	—
Chromic acid 5%	A	D	D	B	B	B
Chromic acid 10%	A	D	D	B	A	B
Chromic acid 30%	A	D	D	B[2]	D	B
Chromic acid 50%	A	D	D	C	B	C
Cider	—	B	B[1]	A	—	A
Citric acid	A	D	A[1]	B[1]	A	A

A = No Effect/Excellent B = Minor Effect/Good C = Moderate Effect/Fair D = Severe Effect/Poor

[1]Maximum 72 °F (22 °C) [2]Maximum 120 °F (48 °C)

01/15/06

Parker Hannifin Corporation
EPS Division
Tel: (801) 972-3000
Fax: (801) 973-4019

www.parker.com/eps

Chemical Compatibility

Medias	PTFE	UHMW PE	TPE	301 SS	Hast C-276	Elgiloy
Clorox (bleach)	A	—	—	A	A	A
Coffee	—	—	—	A	A	A
Copper chloride	A	—	A[1]	D	—	—
Copper cyanide	A	B[2]	—	B	A[1]	—
Copper fluoborate	—	—	—	D	B	—
Copper nitrate	A	B[2]	—	A	B[2]	—
Copper sulfate 5%	A	A[2]	A[1]	B	A	—
Copper sulfate >5%	A	A[2]	A[1]	B	A	—
Cream	A	—	—	A	—	A
Cresols	—	C[1]	D	A[2]	B[2]	—
Cresylic acid	A	B[1]	—	A[1]	B[1]	—
Cyclohexane	A	B[1]	A[1]	A[1]	B	—
Cyclohexanone	A	D	—	A[1]	A[1]	—
Detergents	A	D	—	A[1]	B	A
Diacetone alcohol	A	A	—	B[1]	—	—
Dichloroethane	A[1]	C[1]	—	B	A	—
Diesel fuel	A	C[1]	—	A[1]	B	A
Diethyl ether	A	—	C	B[1]	B[1]	A
Diethylamine	D	D	—	A	A	A
Diethylene glycol	A[2]	B[2]	—	A[1]	B[1]	A
Dimethyl formamide	D	A	—	A	—	—
Diphenyl oxide	A[1]	—	—	B[1]	B[1]	—
Epsom salts	A	A[2]	—	A	B	A
Ethane	A	—	—	A	—	A
Ethanol	A	B	—	A	A	A
Ethanolamine	A[1]	—	—	A	B	—
Ether	A	D	—	A	B[1]	A
Ethyl acetate	A	D	B	B	A	A
Ethyl benzoate	A	C[2]	—	—	—	—
Ethyl chloride	A	C[1]	C	A	B[1]	—
Ethylene bromide	A	D	—	A	B	—
Ethylene chloride	A	D	—	B	—	—
Ethylene chlorohydrin	A	D	—	B	B	—
Ethylene diamine	A	A	—	B[1]	C	—
Ethylene dichloride	A	D	C	B	B	—
Ethylene glycol	A	D	A	B	B[1]	—
Ethylene oxide	A	A	A	B	A	A
Fatty acids	A	D	—	B	A	A
Ferric chloride	A	A[1]	C	D	B[2]	C
Ferric nitrate	A	A[2]	—	B	B[1]	B
Ferric sulfate	A	A[2]	—	B[1]	A[1]	B
Ferrous chloride	A	A[2]	—	D	B[1]	C
Ferrous sulfate	A	A[2]	—	B	B	B
Fluorine	D	D	—	C	B[1]	C
Fluoroboric acid	A	A[2]	—	B	A[1]	—
Fluosilcic acid	A	A[2]	—	C	B	—
Formaldehyde 40%	A	D	B	A[1]	B	A
Formaldehyde 100%	A	B	—	C	A	A
Formic acid	A	D	B	B[1]	A	A
Freon 11	A	C	A	A	A	A
Freon 12	A	A[1]	A	B[1]	A	A
Freon 22	A	—	—	A	A	A
Freon 113	A	—	A	—	A	A
Freon TF	A	—	A	A	A	A
Fruit juice	A	A	—	A	A	A
Fuel oils	B	B	—	A	A[1]	A
Furan resin	A	D	—	A[1]	B	—
Furfural	A	D	—	A	B	—
Gallic acid	B	A	—	A	B[1]	—

Medias	PTFE	UHMW PE	TPE	301 SS	Hast C-276	Elgiloy
Gasoline	B	A	A	A	A	A
Gelatin	A	A[2]	—	A[2]	A	A
Glucose	A	A[2]	—	A[1]	A	A
Glue, PVA	A	A[1]	A	A[1]	A	A
Glycerin	A	A[1]	A	A[2]	A	A
Glycolic acid	A	A[2]	—	A	A	A
Grape juice	A	B	—	A	—	A
Grease	A	—	—	—	A	A
Heptane	A	B[1]	—	A	A	A
Hexane	A	D	A	A	A	A
Honey	A	B	—	A	A	A
Hydraulic oil (Petro)	A	C	—	A	A	A
Hydraulic oil (Synthetic)	A	A	—	A	A	A
Hydrazine	C	—	C	A	—	—
Hydrobromic acid 20%	—	B[2]	—	D	A	C
Hydrobromic acid 100%	A	B[1]	—	D	C	D
Hydrochloric acid 20%	A	A[2]	B	D	A[1]	B
Hydrochloric acid 37%	A	B[2]	C	D	B	C
Hydrochloric acid 100%	A	—	—	D	A	B
Hydrocyanic acid	A	A[2]	C	B[1]	A	—
Hydrocyanic acid gas 10%	A	—	—	—	—	—
Hydrofluoric acid 20%	A	A[2]	—	D	B	C
Hydrofluoric acid 50%	A	A[1]	D	D	B	C
Hydrofluoric acid 75%	A	C[1]	D	D	B	C
Hydrofluoric acid 100%	A	—	D	B[1]	B	C
Hydrofluorosilicic acid 20%	A	B[2]	—	C[2]	B	C
Hydrofluorosilicic acid 100%	A	B[1]	—	D	B	C
Hydrogen gas	A	A[2]	A	A	A	A
Hydrogen peroxide 10%	A	A	—	B[2]	A	D
Hydrogen peroxide 30%	A	C[2]	—	B[2]	A	D
Hydrogen peroxide 50%	A	C[2]	—	B[2]	A	D
Hydrogen peroxide 100%	A	C[2]	—	B[2]	A	D
Hydrogen sulfide (aqua)	A	A	—	C	A	A
Hydrogen sulfide (dry)	A	A	A	C[1]	A	A
Hydroquinone	A	A	—	B	B	—
Hydroxyacetic acid 70%	A	A	—	—	—	—
Iodine	A	A[1]	B	D	A	D
Isopropyl acetate	A	B[1]	C	C	B	—
Isopropyl ether	A[1]	B	—	A	A	A
Jet fuel (JP3,4,5,6,8)	A	D	—	A	A	A
Jet fuel (JP9, 10)	A	D	—	A	A	A
Kerosene	A	C[1]	C	A	B	A
Ketones	A	C[1]	—	A	A	A
Lacquer thinners	A	A	D	A[1]	A	A
Lacquers	A	A	—	A[1]	A	A
Lactic acid	A	A[1]	D	B[1]	B[1]	—
Lard	A	A	—	A	A	A
Latex	A	—	—	A[2]	A	A
Lead acetate	A	A[2]	—	B	B[1]	—
Lead sulfamate	B	A[1]	—	C	—	—
Ligroin	A	A	—	—	—	—
Lime	A[1]	A	—	A	—	A
Lubricants	A	D	A	A[2]	A	A
Magnesium carbonate	A[1]	B	—	B	B	—
Magnesium chloride	A	A[1]	C	D	A[2]	—
Magnesium hydroxide	A	A[2]	C	B	A	A
Magnesium nitrate	A	A[2]	—	B	A	A
Magnesium sulfate	A	A[2]	—	A	B	—
Maleic acid	A	B[2]	—	A	B	—

A = No Effect/Excellent B = Minor Effect/Good C = Moderate Effect/Fair D = Severe Effect/Poor

[1]Maximum 72 °F (22 °C) [2]Maximum 120 °F (48 °C)

01/15/06

Parker Hannifin Corporation
EPS Division
Tel: (801) 972-3000
Fax: (801) 973-4019

www.parker.com/eps

Medias	PTFE	UHMW PE	TPE	301 SS	Hast C-276	Elgiloy
Malic acid	A	B[2]	—	A	B	—
Mayonnaise	A	D	—	C	A	A
Melamine	A	—	—	—	—	—
Mercuric chloride (dilute)	A	A	B	D	C	D
Mercuric cyanide	B	A	—	C	A	—
Mercury	A	A	B	A	A[2]	A
Methane	A	—	—	A	A	A
Methanol	A	A[1]	B	A	A	A
Methyl acetate	A	B[1]	—	A	A	A
Methyl acrylate	—	—	—	A	—	—
Methyl alcohol 10%	A	A[1]	B	A	A	A
Methyl bromide	A	C[1]	—	A	—	—
Methyl cellosolve	A	—	—	B	—	—
Methyl chloride	A	C[1]	—	A	B	B
Methyl dichloride	—	—	—	—	—	—
Methyl ethyl ketone (MEK)	A	B[2]	B	A	A	A
Methyl isobutyl ketone	A	C	B	B	A	A
Methyl isopropyl ketone	A	D	—	A	—	A
Methylamine	A	A[1]	—	A	—	—
Methylene chloride	A	C	D	B	B	—
MIL-H-5606	A	—	—	A	—	—
MIL-L-7808	A	—	—	A	—	—
MIL-L-23699	A	—	—	A	—	—
MIL-H-46170	A	—	—	A	—	—
Milk	A	A	—	A	A	A
Mineral spirits	A	B	—	A	B	A
Molasses	A	A	—	A	A	A
Monoethanolamine	A	C	—	A	—	A
Mustard	A	A	—	A	A	A
Naphtha	B	A[1]	B	A	B	A
Naphthalene	A	C	B	A	A	A
Nickel chloride	A	A	—	D	B	C
Nickel sulfate	A[2]	A	—	B	B	—
Nitric acid (5 – 10%)	A	B	C	A	A[1]	A
Nitric acid (20%)	A	C	D	A	A[1]	A
Nitric acid (50%)	A	B[1]	D	A[2]	A[1]	A
Nitric acid (concentrated)	A	C[1]	D	A[1]	B[1]	A
Nitrobenzene	A	C[1]	D	B	D	—
Nitrous acid	A	—	—	B	D	—
Nitrous oxide	A	C	—	B	B	—
Oils:						
Aniline	A	—	D	A	B	A
Castor	A	—	B[1]	A	—	A
Cocoa Nut	A	A	—	A	A	A
Cod Liver	A	—	—	A	A	A
Corn	A	A	A	A	A	A
Cotton Seed	A	A	A[1]	A	A	A
Creosote	A	C	D	B	B	A
Diesel fuel	A	A	A[1]	A	B	A
Fuel	A	B	A	A	A[1]	A
Ginger	A	—	—	D	—	A
Lemon	A	—	—	A	—	A
Linseed	A	A	B[1]	A	B	A
Mineral	A	B[1]	A	A	A	A
Olive	A[1]	A[1]	—	A	A	A
Orange	—	C[1]	—	A	A	A
Palm	A	A	—	A	—	A
Peanut	A	A	—	A	—	A
Peppermint	A	—	—	A	—	A

Medias	PTFE	UHMW PE	TPE	301 SS	Hast C-276	Elgiloy
Oils (Continued):						
Pine	A	D	—	A	—	A
Rapeseed	A	D	—	A	—	A
Rosin	A	B[2]	—	A[1]	A	A
Sesame Seed	A	—	—	A	—	A
Silicone	A	A	A	A	A	A
Soybean	A	A[1]	B	A	A	A
Tanning	—	—	—	A	—	A
Transformer	A	C[1]	—	A	—	A
Turbine	A	C	—	A	—	A
Oleic acid	A	C[2]	A	A	A[2]	A
Oleum 25%	A	D	C	B[2]	A	—
Oleum 100%	A	D	—	A	D	—
Oxalic acid (cold)	A[1]	A[2]	D	B	B	B
Ozone	A	A	C	B	—	A
Paraffin	A	B	—	A	B	A
Pentane	A	D	—	C	A	A
Perchloric acid	A	B	—	C	B	—
Perchloroethylene	A	D	C	B	B	—
Petrolatum	C	B	—	A	A	—
Phenol (10%)	A	B	—	B	B	—
Phosphoric acid (<40%)	A	A	—	D	A[2]	B
Phosphoric acid (>40%)	A	B[1]	—	D	A[2]	C
Phosphoric acid (crude)	A	B[1]	—	D	A[2]	—
Photographic developer	A	A	—	A	B	—
Phthalic anhydride	A	—	—	A	A	—
Picric acid	A	A	—	B	B	—
Potash	—	A[1]	D	B	B	A
Potassium bicarbonate	A	A	—	B	B	—
Potassium bromide	A	A	—	B	B	—
Potassium chlorate	A	A[1]	—	B[1]	B	—
Potassium chloride	A	A[1]	B	B[1]	A	B
Potassium chromate	A[1]	A	—	B[1]	A	—
Potassium cyanide sols.	A	A	B	B[1]	B	—
Potassium dichromate	A	A	C	B	B	B
Potassium ferrocyanide	A	A[1]	—	B	B	—
Potassium hydroxide	A	A	D	B	B[1]	B
Potassium nitrate	A	B	B	B	B[1]	—
Potassium permanganate	A	A	D	B[1]	A[1]	—
Potassium sulfate	A	A[2]	B	B[1]	B[1]	—
Potassium sulfide	A	A[2]	—	B	—	—
Propane (liquefied)	A	C[1]	A	A	A	A
Propylene glycol	A	B[2]	—	B	B	B
Pyridine	A	B[1]	C	A	B	—
Pyrogallic acid	A	—	—	B[2]	B	—
Rosins	A	B[1]	—	A[1]	—	A
Rum	—	—	—	A	—	A
Rust inhibitors	—	—	—	A	—	A
Salad dressings	—	—	—	A	—	A
Sea water	A	A[2]	A	C	A	A
Shellac (bleached)	A	A[1]	—	A	—	A
Silicone	A	—	A	A	—	A
Silver bromide	A	A	—	D	A	—
Silver nitrate	A	A	—	B	A	—
Skydrol 500B	A	—	D	A	—	—
Soap solutions	A	D	A	A	A	A
Sodium acetate	A	A	—	B	A	A
Sodium aluminate	A	—	—	A	B	—
Sodium bicarbonate	A	A[2]	—	A	B[1]	—

A = No Effect/Excellent B = Minor Effect/Good C = Moderate Effect/Fair D = Severe Effect/Poor

[1]Maximum 72 °F (22 °C) [2]Maximum 120 °F (48 °C)

01/15/06

Parker Hannifin Corporation
EPS Division
Tel: (801) 972-3000
Fax: (801) 973-4019
www.parker.com/eps

Chemical Compatibility

Medias	PTFE	UHMW PE	TPE	301 SS	Hast C-276	Elgiloy
Sodium bisulfate	A	A[2]	C	D	B[2]	—
Sodium bisulfite	A	A[2]	B	B[1]	B	—
Sodium borate	A	A[2]	B	B[2]	A	—
Sodium carbonate	A	B[2]	—	A	A	—
Sodium chlorate	A	B[2]	—	A	B[1]	—
Sodium chloride	A	A[2]	A	B	A	A
Sodium chromate	A	—	—	B[1]	A	—
Sodium cyanide	A	A[2]	B	A[1]	A	A
Sodium fluoride	A[1]	A[2]	—	D	A	B
Sodium hydroxide (20%)	A	D	B	B	B	B
Sodium hydroxide (50%)	A	D	C	B	C	B
Sodium hydroxide (80%)	A[1]	D	—	C	A[1]	B
Sodium hypochlorite (100%)	A	B[2]	D	D	B	C
Sodium hypochlorite (<20%)	A	A	A	C	A	B
Sodium hyposulfite	A	—	—	A	—	—
Sodium metaphosphate	A	A[1]	—	A	—	—
Sodium metasilicate	A	—	—	A	A	—
Sodium nitrate	A	A[2]	—	B[1]	B	—
Sodium perborate	A	A[1]	—	B	B	B
Sodium peroxide	A	A	—	A	B	A
Sodium polyphosphate	A	A	—	B	A	—
Sodium silicate	A	A[2]	—	A	B	—
Sodium sulfate	A	A[2]	—	B	B	—
Sodium sulfite	A	B[1]	—	B	B[1]	—
Sodium tetraborate	A	A[2]	—	B	B	—
Sodium thiosulfate (hypo)	A	A[1]	—	A[2]	—	—
Stannic chloride	A	A[2]	—	D	B	C
Stannous chloride	A	B[2]	C	C[2]	B	B
Starch	A	B	—	A	—	A
Stearic acid	A	B[1]	C	B	B	—
Stoddard solvent	A	C[1]	—	A	A	—
Styrene	A	—	D	A	D	—
Sugar (liquids)	A	—	—	A	A	A
Sulfate (liquors)	A	A[2]	—	B	B	B
Sulfur chloride	A	C[1]	—	D	A	A
Sulfur dioxide (dry)	A	A[1]	C	D	B	B
Sulfur hexaflouride	—	B	—	—	—	—
Sulfur trioxide	A	—	—	A	—	—

Medias	PTFE	UHMW PE	TPE	301 SS	Hast C-276	Elgiloy
Sulfur trioxide (dry)	A	C[1]	—	D	B	—
Sulfuric acid (10 – 75%)	A	A[1]	—	D	B[1]	D
Sulfuric acid (75 – 100%)	A	B[1]	C	C	B[1]	C
Sulfuric acid (<10%)	A	A[1]	A	D	B[1]	D
Sulfuric acid (cold conc)	A	C	B	C	A[1]	C
Sulfuric acid (hot conc)	A	D	—	D	D	D
Sulfurous acid	A	B[2]	—	B[1]	B	—
Tallow	A	C	—	A	—	A
Tannic acid	A	B[2]	A	B[1]	B[1]	—
Tanning liquors	A	A[1]	—	A[2]	B	B
Tartaric acid	A	A[1]	C	C[2]	B	—
Tetrachloroethane	A	—	—	B	A	A
Tetrachloroethylene	A	B	—	—	—	A
Tetrahydrofuran	A	C[1]	B	A	A	A
Tin Salts	A	—	—	—	C	—
Toluene (toluol)	A	C[1]	B	A	A	A
Trichloroacetic acid	A	A	—	D	B	—
Trichloroethane	A	—	—	B	A	A
Trichloroethylene	A	D	C	B	A	A
Trichloropropane	A[1]	—	—	A	A	A
Tricresyl phosphate	A	B[1]	—	B	A	—
Triethylamine	A	—	—	A	—	A
Trisodium phosphate	A	A	A	B	A	—
Turpentine	A	D	—	A	B	A
Urea	A	A	—	B	B	B
Uric acid	A	B	—	B	B	—
Varnish	A	A	—	A	A	A
Vegetable juice	A	—	—	A	—	A
Vinegar	A	A	—	A	A	A
Water acid, mine	A	A[2]	—	B	A	A
Water, distilled	A	A[2]	—	A	A	A
Water, fresh	A	A[2]	A	A	A	A
Water, salt	A	A[2]	A	B	A	A
Whiskey & wines	A	C	—	A	—	A
White liquor (pulp mill)	A	A[2]	—	A	A	A
Xylene	A	B	B	B	A	A
Zinc chloride	A	A[1]	A	B	B	—

Note: Chemical compatibility ratings on this and preceding pages are intended only as a guide for the user's initial selection. Actual compatibility may be different based on application parameters including pressure, temperature and specific media contents and percentages. Actual testing in the specific application media and operating parameters is the responsibility of the user to determine final material selection and approval. Please call Parker EPS Application Engineering with any questions regarding material selection at (801) 972-3000.

A = No Effect/Excellent B = Minor Effect/Good C = Moderate Effect/Fair D = Severe Effect/Poor

[1]Maximum 72 °F (22 °C) [2]Maximum 120 °F (48 °C)

01/15/06

Parker Hannifin Corporation
EPS Division
Tel: (801) 972-3000
Fax: (801) 973-4019

www.parker.com/eps

ISO Tolerances

Limits in Millimeters

Above	Up to and Including	H9	h9
—	3 mm	+.025 -.000	+.000 -.025
3 mm	6 mm	+.030 -.000	+.000 -.030
6 mm	10 mm	+.036 -.000	+.000 -.036
10 mm	18 mm	+.043 -.000	+.000 -.043
18 mm	30 mm	+.052 -.000	+.000 -.052
30 mm	50 mm	+.062 -.000	+.000 -.062
50 mm	80 mm	+.074 -.000	+.000 -.074
80 mm	120 mm	+.087 -.000	+.000 -.087
120 mm	180 mm	+.100 .000	+.000 -.100
180 mm	250 mm	+.115 -.000	+.000 -.115
250 mm	315 mm	+.130 -.000	+.000 -.130
315 mm	400 mm	+.140 -.000	+.000 -.140
400 mm	500 mm	+.155 -.000	+.000 -.155
500 mm	630 mm	+.175 -.000	+.000 -.175
630 mm	800 mm	+.200 -.000	+.000 -.200
800 mm	1000 mm	+.230 -.000	+.000 -.230
1000 mm	1250 mm	+.260 -.000	+.000 -.260

Parker Hannifin Corporation
EPS Division
Tel: (801) 972-3000
Fax: (801) 973-4019

Notes

Parker Hannifin Corporation
EPS Division
Tel: (801) 972-3000
Fax: (801) 973-4019

www.parker.com/eps

Other Parker EPS Products

Parker EPS Division

Parker EPS Division designs and manufactures engineered elastomeric, polymeric and plastic seals and sealing systems for dynamic applications. EPS Division has a worldwide sealing network consisting of manufacturing locations in Utah, Texas, New York, Illinois and Baja, Mexico; and more than 200 distributor and service center locations in nine countries.

Learn more about Parker EPS Products

Catalog Services

EPS Division's catalogs and technical bulletins are available through Parker's Catalog Services. To order catalogs and have them shipped directly, call 1-800-C-PARKER, or send your requests via e-mail to: catalogs@parker.com.

Technical Support

Parker product engineers are available to address temperature, pressure, gland design, surface finish and all other seal design considerations, and can often optimize an existing design or propose cost-effective alternatives. Our in-house test and R&D laboratories enable us to quickly develop and perform appropriate test protocols for our customers.

Parker Hannifin Corporation
EPS Division
Tel: (801) 972-3000
Fax: (801) 973-4019

Finite Element Analysis & Seal Design Optimization

Using sophisticated Finite Element Analysis (FEA) software, Parker engineers can analyze critical design information, such as stress concentration, heat transfer, fluid flow and electromagnetic properties of new and existing seal geometry. This streamlines tooling and production processes, and helps ensure the selection of the right material and geometry for your application. Using FEA technology, our engineers can determine:

FEA plot of a Parker Seal geometry under compression

- Deformation (deformed shape)
- Volume/void ratios, gland fill %
- Stress distribution
- Load - Deflection
- Stability analysis
- Friction force
- Thermal effects
- Material evaluation
- Seal life prediction

ProTech Bearing Isolators

ProTech bearing isolators are the ultimate in bearing protection with unitized, two-piece, non-contact design. ProTech provides zero lubricant leakage and total exclusion of contaminants.

See: Catalog EPS 5275

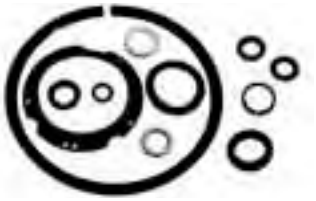

Rotary Shaft Oil Seals

Parker offers a complete line of oil seal products including the proprietary Clipper® Oil Seal design with integrally molded rubber/fiber outer case and elastomeric inner lip. Varying profiles include factory split, MIST, single-lip, dual-lip, excluder and molded-in spring. Parker Oil Seals are elastomer-lipped, metal-retained rotary shaft seals available in a multitude of configurations.

See: Catalog EPS 5350

Parker Hannifin Corporation
EPS Division
Tel: (801) 972-3000
Fax: (801) 973-4019

Notes

Parker Hannifin Corporation
EPS Division
Tel: (801) 972-3000
Fax: (801) 973-4019

www.parker.com/eps

About Parker's Motion & Control Technologies

Learn More About Us

At Parker, we're guided by a relentless drive to help our customers become more productive and achieve higher levels of profitability by engineering the best systems for their requirements. It means looking at customer applications from many angles to find new ways to create value. Whatever the motion and control technology need, Parker has the experience, breadth of product and global reach to consistently deliver. No company knows more about motion and control technology than Parker. For further info call 1 800 C-Parker (1 800 272 7537)

Aerospace

Key Markets

Aftermarket services
Commercial transports
Engines
General & business aviation
Helicopters
Launch vehicles
Military aircraft
Missiles
Power generation
Regional transports
Unmanned aerial vehicles

Key Products

Control systems & actuation products
Engine systems & components
Fluid conveyance systems & components
Fluid metering, delivery & atomization devices
Fuel systems & components
Fuel tank inerting systems
Hydraulic systems & components
Thermal management
Wheels & brakes

Climate Control

Key Markets

Agriculture
Air conditioning
Construction Machinery
Food & beverage
Industrial machinery
Life sciences
Oil & gas
Precision cooling
Process
Refrigeration
Transportation

Key Products

Accumulators
Advanced actuators
CO_2 controls
Electronic controllers
Filter driers
Hand shut-off valves
Heat exchangers
Hose & fittings
Pressure regulating valves
Refrigerant distributors
Safety relief valves
Smart pumps
Thermostatic expansion valves

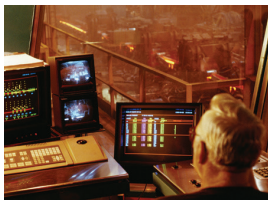

Electromechanical

Key Markets

Aerospace
Factory automation
Life science & medical
Machine tools
Packaging machinery
Paper machinery
Plastics machinery & converting
Primary metals
Semiconductor & electronics
Textile
Wire & cable

Key Products

AC/DC drives & systems
Electric actuators, gantry robots & slides
Electrohydrostatic actuation systems
Electromechanical actuation systems
Human machine interface
Linear motors
Stepper motors, servo motors, drives & controls
Structural extrusions

Filtration

Key Markets

Aerospace
Food & beverage
Industrial plant & equipment
Life sciences
Marine
Mobile equipment
Oil & gas
Power generation & renewable energy
Process
Transportation
Water Purification

Key Products

Analytical gas generators
Compressed air filters & dryers
Engine air, coolant, fuel & oil filtration systems
Fluid condition monitoring systems
Hydraulic & lubrication filters
Hydrogen, nitrogen & zero air generators
Instrumentation filters
Membrane & fiber filters
Microfiltration
Sterile air filtration
Water desalination & purification filters & systems

Fluid & Gas Handling

Key Markets

Aerial lift
Agriculture
Bulk chemical handling
Construction machinery
Food & beverage
Fuel & gas delivery
Industrial machinery
Life sciences
Marine
Mining
Mobile
Oil & gas
Renewable energy
Solenoid valves
Transportation

Key Products

Check valves
Connectors for low pressure fluid conveyance
Deep sea umbilicals
Diagnostic equipment
Hose couplings
Industrial hose
Mooring systems & power cables
PTFE hose & tubing
Quick couplings
Rubber & thermoplastic hose
Tube fittings & adapters
Tubing & plastic fittings

Hydraulics

Key Markets

Aerial lift
Agriculture
Alternative energy
Construction machinery
Forestry
Industrial machinery
Machine tools
Marine
Material handling
Mining
Oil & gas
Power generation
Refuse vehicles
Renewable energy
Truck hydraulics
Turf equipment

Key Products

Accumulators
Cartridge valves
Electrohydraulic actuators
Human machine interfaces
Hybrid drives
Hydraulic cylinders
Hydraulic motors & pumps
Hydraulic systems
Hydraulic valves & controls
Hydrostatic steering
Integrated hydraulic circuits
Power take-offs
Power units
Rotary actuators
Sensors

Pneumatics

Key Markets

Aerospace
Conveyor & material handling
Factory automation
Life science & medical
Machine tools
Packaging machinery
Transportation & automotive

Key Products

Air preparation
Brass fittings & valves
Manifolds
Pneumatic accessories
Pneumatic actuators & grippers
Pneumatic valves & controls
Quick disconnects
Rotary actuators
Rubber & thermoplastic hose & couplings
Structural extrusions
Thermoplastic tubing & fittings
Vacuum generators, cups & sensors

Process Control

Key Markets

Alternative fuels
Biopharmaceuticals
Chemical & refining
Food & beverage
Marine & shipbuilding
Medical & dental
Microelectronics
Nuclear Power
Offshore oil exploration
Oil & gas
Pharmaceuticals
Power generation
Pulp & paper
Steel
Water/wastewater

Key Products

Analytical Instruments
Analytical sample conditioning products & systems
Chemical injection fittings & valves
Fluoropolymer chemical delivery fittings, valves & pumps
High purity gas delivery fittings, valves, regulators & digital flow controllers
Industrial mass flow meters/ controllers
Permanent no-weld tube fittings
Precision industrial regulators & flow controllers
Process control double block & bleeds
Process control fittings, valves, regulators & manifold valves

Sealing & Shielding

Key Markets

Aerospace
Chemical processing
Consumer
Fluid power
General industrial
Information technology
Life sciences
Microelectronics
Military
Oil & gas
Power generation
Renewable energy
Telecommunications
Transportation

Key Products

Dynamic seals
Elastomeric o-rings
Electro-medical instrument design & assembly
EMI shielding
Extruded & precision-cut, fabricated elastomeric seals
High temperature metal seals
Homogeneous & inserted elastomeric shapes
Medical device fabrication & assembly
Metal & plastic retained composite seals
Shielded optical windows
Silicone tubing & extrusions
Thermal management
Vibration dampening

ENGINEERING YOUR SUCCESS.

01/15/17

Parker Hannifin Corporation
EPS Division
Tel: (801) 972-3000

Offer of Sale

Click to download current Sale Terms

The items described in this document are hereby offered for sale at prices to be established by Parker Hannifin Corporation, its subsidiaries and its authorized distributors. This offer and its acceptance by any customer ("Buyer") shall be governed by all of the following Terms and Conditions. Buyer's order for any item described in this document, when communicated to Parker Hannifin Corporation, its subsidiary or any authorized distributor ("Seller") verbally or in writing, shall constitute acceptance of this offer.

1. Terms and Conditions of Sale: All descriptions, quotations, proposals, offers, acknowledgements, acceptances and sales of Seller's products are subject to and shall be governed exclusively by the terms and conditions stated herein. Buyer's acceptance of any offer to sell is limited to these terms and conditions. Any terms or conditions in addition to, or inconsistent with those stated herein, proposed by Buyer in any acceptance of an offer by Seller, are hereby objected to. No such additional, different or inconsistent terms and conditions shall become part of the contract between Buyer and Seller unless expressly accepted in writing by Seller. Seller's acceptance of any offer to purchase by Buyer is expressly conditional upon Buyer's assent to all the terms and conditions stated herein, including any terms in addition to, or inconsistent with those contained in Buyer's offer. Acceptance of Seller's products shall in all events constitute such assent.

2. Payment: Payment shall be made by Buyer net 30 days from the date of invoice of the items purchased hereunder. Seller reserves the right to charge interest on all past due amounts. Any claims by Buyer for omissions or shortages in a shipment shall be waived unless Seller receives notice thereof within 30 days after Buyer's receipt of the shipment.

3. Delivery: Unless otherwise provided in the face hereof, delivery shall be made F.O.B. Seller's plant. Regardless of the method of delivery, however, risk of loss shall pass to Buyer upon Seller's delivery to a carrier. Any delivery dates shown are approximate only and Seller shall have no liability for any delays in delivery.

4. Warranty: Seller warrants that the items sold hereunder shall be free from defects in material or workmanship at the time of delivery. THIS WARRANTY COMPRISES THE SOLE AND ENTIRE WARRANTY PERTAINING TO ITEMS PROVIDED HEREUNDER. SELLER MAKES NO OTHER WARRANTY, GUARANTEE, OR REPRESENTATION OF ANY KIND WHATSOEVER. ALL OTHER WARRANTIES, INCLUDING, BUT NOT LIMITED TO, MERCHANTIBILITY AND FITNESS FOR PURPOSE, WHETHER EXPRESS, IMPLIED OR ARISING BY OPERATION OF LAW, TRADE USAGE, OR COURSE OF DEALING ARE HEREBY DISCLAIMED.

NOTWITHSTANDING THE FOREGOING, THERE ARE NO WARRANTIES WHATSOEVER ON ITEMS BUILT OR ACQUIRED WHOLLY OR PARTIALLY, TO BUYER'S DESIGNS OR SPECIFICATIONS.

5. Limitation of Remedy: SELLER'S LIABILITY ARISING FROM OR IN ANY WAY CONNECTED WITH THE ITEMS SOLD OR THIS CONTRACT SHALL BE LIMITED EXCLUSIVELY TO REPAIR OR REPLACEMENT OF THE ITEMS SOLD OR REFUND OF THE PURCHASE PRICE PAID BY BUYER, AT SELLER'S SOLE OPTION. IN NO EVENT SHALL SELLER BE LIABLE FOR ANY INCIDENTAL, CONSEQUENTIAL OR SPECIAL DAMAGES OF ANY KIND OR NATURE WHATSOEVER, INCLUDING, BUT NOT LIMITED TO LOST PROFITS ARISING FROM OR IN ANY WAY CONNECTED WITH THIS AGREEMENT OR ITEMS SOLD HEREUNDER, WHETHER ALLEGED TO ARISE FROM BREACH OF CONTRACT, EXPRESS OR IMPLIED WARRANTY, OR IN TORT, INCLUDING WITHOUT LIMITATION, NEGLIGENCE, FAILURE TO WARN OR STRICT LIABILITY.

6. Changes, Reschedules and Cancellations: Buyer may request to modify the designs or specifications for the items sold hereunder as well as the quantities and delivery dates thereof, or may request to cancel all or part of this order, however, no such requested modification or cancellation shall become part of the contract between Buyer and Seller unless accepted by Seller in a written amendment to this Agreement. Acceptance of any such requested modification or cancellation shall be at Seller's discretion, and shall be upon such terms and conditions as Seller may require.

7. Special Tooling: A tooling charge may be imposed for any special tooling, including without limitation, dies, fixtures, molds and patterns, acquired to manufacture items sold pursuant to this contract. Such special tooling shall be and remain Seller's property notwithstanding payment of any charges by Buyer. In no event will Buyer acquire any interest in apparatus belonging to Seller which is utilized in the manufacture of the items sold hereunder, even if such apparatus has been specially converted or adapted for such manufacture and notwithstanding any charges paid by Buyer. Unless otherwise agreed, Seller shall have the right to alter, discard or otherwise dispose of any special tooling or other property in its sole discretion at any time.

8. Buyer's Property: Any designs, tools, patterns, materials, drawings, confidential information or equipment furnished by Buyer or any other items which become Buyer's property, may be considered obsolete and may be destroyed by Seller after two (2) consecutive years have elapsed without Buyer placing an order for the items which are manufactured using such property. Seller shall not be responsible for any loss or damage to such property while it is in Seller's possession or control.

9. Taxes: Unless otherwise indicated on the face hereof, all prices and charges are exclusive of excise, sales, use, property, occupational or like taxes which may be imposed by any taxing authority upon the manufacture, sale or delivery of the items sold hereunder. If any such taxes must be paid by Seller or if Seller is liable for the collection of such tax, the amount thereof shall be in addition to the amounts for the items sold. Buyer agrees to pay all such taxes or to reimburse Seller therefor upon receipt of its invoice. If Buyer claims exemption from any sales, use or other tax imposed by any taxing authority, Buyer shall save Seller harmless from and against any such tax, together with any interest or penalties thereon which may be assessed if the items are held to be taxable.

10. Indemnity for Infringement of Intellectual Property Rights: Seller shall have no liability for infringement of any patents, trademarks, copyrights, trade dress, trade secrets or similar rights except as provided in this Part 10. Seller will defend and indemnify Buyer against allegations of infringement of U.S. patents, U.S. trademarks, copyrights, trade dress and trade secrets (hereinafter "Intellectual Property Rights"). Seller will defend at its expense and will pay the cost of any settlement or damages awarded in an action brought against Buyer based on an allegation that an item sold pursuant to this contract infringes the Intellectual Property Rights of a third party. Seller's obligation to defend and indemnify Buyer is contingent on Buyer notifying Seller within ten (10) days after the Buyer becomes aware of such allegations of infringement, and Seller having sole control over the defense of any allegations or actions including all negotiations for settlement or compromise. If an item sold hereunder is subject to a claim that it infringes the Intellectual Property Rights of a third party, Seller may, at its sole expense and option, procure for Buyer the right to continue using said item, place or modify said item so as to make it noninfringing, or offer to accept return of said item and return the purchase price less a reasonable allowance for depreciation. Notwithstanding the foregoing, Seller shall have no liability for claims of infringement based on information provided by Buyer, or directed to items delivered hereunder for which the designs are specified in whole or part by Buyer, or infringements resulting from the modification, combination or use in a system of any item sold hereunder. The foregoing provisions of this Part 10 shall constitute Seller's sole and exclusive liability and Buyer's sole and exclusive remedy for infringement of Intellectual Property Rights. If a claim is based on information provided by Buyer or if the design for an item delivered hereunder is specified in whole or in part by Buyer, Buyer shall defend and indemnify Seller for all costs, expenses or judgements resulting from any claim that such item infringes any patent, trademark, copyright, trade dress, trade secret or any similar right.

11. Force Majeure: Seller does not assume the risk of and shall not be liable for delay or failure to perform any of Seller's obligations by reason of circumstances beyond the reasonable control of Seller (hereinafter "Events of Force Majeure"). Events of Force Majeure shall include without limitation, accidents, acts of God, strikes or labor disputes, acts, laws, rules or regulations of any government or government agency, fires, floods, delays or failures in delivery of carriers or suppliers, shortages of materials and any other cause beyond Seller's control.

12. Any special requirements for items to be provided by Seller hereunder including without limitation; compliance with military specifications, special documentation, or testing requirements, must be communicated to Seller in writing at the time the items are first requested. Any such requests that are communicated to Seller after preparation to manufacture an item has commenced may result in additional charges for rework or remanufacture of the item.

13. Entire Agreement/Governing Law: The terms and conditions set forth herein, together with any amendments, modifications and any different terms or conditions expressly accepted by Seller in writing, shall constitute the entire Agreement concerning the items sold, and there are no oral or other representations or agreements which pertain thereto. This Agreement shall be governed in all respects by the law of the State of Ohio. No actions arising out of the sale of the items sold hereunder or this Agreement may be brought by either more than two (2) years after the cause of action accrues.

Parker Hannifin Corporation
EPS Division
Tel: (801) 972-3000
Fax: (801) 973-4019

Parker Hannifin Corporation
Seal Group
Engineered Polymer Systems Division
Salt Lake City Operations and Headquarters
2220 South 3600 West
Salt Lake City, UT 84119 USA
Ph: 801-972-3000
Fax: 801-973-4019

Nacogdoches Operations
403 Industrial Drive
Nacogdoches, TX 75963 USA
Ph: 936-560-8900
Fax: 936-560-8998
Toll Free: 1-800-233-3900

Marion Operations
3967 Buffalo Street
Marion, NY 14505 USA
Ph: 315-926-4211
Fax: 315-926-4498

Chicago Operations
2565 Northwest Parkway
Elgin, IL 60124 USA
Ph: 847-783-4300
Fax: 847-783-4301

Parker Hannifin Corporation
Corporate Office
6035 Parkland Blvd.
Cleveland, OH 44124-4141 USA
Ph: 216-896-3000
Fax: 216-896-4000

1-800-C-PARKER
www.parker.com/eps

WARNING:

These products can expose you to chemicals including carbon black (airborne and extracts), antimony trioxide, titanium dioxide, silica (crystalline), di(2-ethylhexyl)phthalate, ethylene thiourea, acrylonitrile, 1,3-butadiene, epichlorohydrin, toluenediisocyanate, tetrafluoroethylene, ethylbenzene, formaldehyde, furfuryl alcohol, glass fibers, methyl isobutyl ketone, nickel (metallic and compounds), lead and lead compounds which are know to the State of California to cause cancer; and 1,3-butadiene, epichlorohydrin, di(2-ethylhexyl)phthalate, di-isodecyl phthalate, ethylene thiourea, methyl isobutyl ketone, methanol, toluene, lead and lead compounds which are known to the State of California to cause birth defects and other reproductive harm. For more information go to www.P65Warnings.ca.gov.

02/08 Digital LoRes
Reprint 2014, 2016 , 2018
Revised: 10/2021